RESEARCH PROGRAM ON
Roots, Tubers and Bananas

CGIAR

Trainer's manual

A training course on setting up and running a banana tissue culture nursery

IITA
Research to Nourish Africa

VEDCO

Includes modules on:

Business planning and business skills
Practical management of a nursery
Marketing

Trainer's manual

A training course on setting up and running a banana tissue culture nursery

Moses Lule, Thomas Dubois and Daniel Coyne
International Institute of Tropical Agriculture (IITA)

Dan Kisitu, Herbert Kamusiime and Joseph Bbemba
Volunteer Efforts for Development Concern (VEDCO)

With contributions from

Vinzenz Bauer and Volker Hoffman, Universität Hohenheim

Peter Mwirigi, Peter Mwaura, Losenge Turoop and Esther Kahangi
Jomo Kenyatta University of Agriculture and Technology

Edward Agabe, TechnoServe

Salvator Nkurunziza, Jean-Claude Hobayo
International Institute of Tropical Agriculture

Grace Babirye, Jane Kintu and Henry Kizito
Volunteer Efforts for Development Concern

Funded by
Federal Ministry of Economic Cooperation and Development (BMZ)
Deutsche Gesellschaft für Internationale Zusammenarbeit (GIZ)

ISBN: 978-978-8444-09-1

Published by International Institute of Tropical Agriculture, January 2013

Katherine Lopez

PMB 5320, Oyo Road, Ibadan 200001, Oyo State, Nigeria

International Mailing Address: IITA, Carolyn House, 26 Dingwall Road, Croydon, CR9 3EE, UK

Citation: Lule M, Dubois T, Coyne D, Kisitu D, Kamusiime H and Bbemba J. 2013. Trainer's manual. A Training Course on Setting Up and Running a Banana Tissue Culture Nursery. International Institute of Tropical Agriculture, Ibadan, Nigeria. 88p.

©2013 International Institute of Tropical Agriculture (IITA)

All rights reserved. No part of this book may be reproduced and/or published in any form or by any means, electronic or mechanical, including photocopying, microfilm and recording, or by any information storage and retrieval system, without written permission from the publishers.

Cover photo

Potting plantlets by prospective nursery operators. Thomas Dubois, IITA.

Photos in document by Herbert Kamusiime, Dan Kisitu, Moses Lule and Thomas Dubois

Printed by Phoenix Design Aid, Østergade 19, 8900 Randers, Denmark

Contents

Background: the need for training in tissue culture bananas v

How to use this manual vi

Producing tissue culture bananas: a summary vii

Module 1: Introduction to tissue culture bananas 1

Module 2: Business planning and business skills for nursery operators 23

Module 3: Practical management of a banana tissue culture nursery.....59

Module 4: Marketing for nursery operators 79

Acknowledgements

We acknowledge owners and staff of the tissue culture laboratories and nurseries in Burundi, Kenya and Uganda where some of the training sessions took place, and support staff of the International Institute of Tropical Agriculture (IITA) and Volunteer Efforts for Development Concern (VEDCO) who facilitated the sessions. We also thank the many trainees, both farmers and potential nursery operators, who gave valuable, practical input during the writing of the manual.

This manual was published with funds provided by the Federal Ministry of Economic Cooperation and Development (BMZ) and the Deutsche Gesellschaft für Internationale Zusammenarbeit (GIZ) as part of the 2008–2011 project 'Banana tissue culture: community dissemination pathways for delivery of high quality planting material to create markets for African farmers'. Additional funds from the Consultative Group on International Agricultural Research (CGIAR) Program on Roots, Tubers, and Bananas (CRP-RTB) allowed us to print many more copies of the manual. The project was led by IITA in collaboration with Bioversity International, Georg August Universität Göttingen (Germany), Institute de Recherche Agronomique et Zootechnique (Burundi), Jomo Kenyatta University of Agriculture and Technology (Kenya), National Agricultural Research Organization (Uganda), Universität Hohenheim (Germany), VEDCO (Uganda) and Zanzibar Commission for Agriculture (Tanzania). Emily Ouma (IITA) and Piet Van Asten (IITA) are greatly acknowledged for technical assistance, as well as the very helpful comments from four anonymous reviewers. The manual was edited by Anne Moorhead.

Background: the need for training in tissue culture bananas

Banana is an essential staple crop throughout the Great Lakes region of East Africa. It is also an important source of trade and income. To safeguard sustainable banana production and generate wealth for smallholder farmers, high quality planting material is crucial.

Banana in smallholder farmer systems in East Africa is traditionally propagated by means of suckers, which contain pests and diseases. Plants produced through tissue culture are mostly free from pests and diseases (with a few exceptions). There are many further benefits to using tissue culture plants: (1) they are more vigorous, meaning faster growth and higher yields; (2) they are more uniform, allowing for better planned marketing; and (3) they can be produced in large quantities in a short period of time, facilitating distribution of both existing and new cultivars. In other words, tissue culture technology can help banana farmers to make the transition from subsistence to income generation.

However, there are hurdles that are limiting widespread uptake and optimal use of tissue culture technology among smallholder farmers in East Africa. Distribution systems of tissue culture plantlets to farmers are one key obstacle. Plantlets are often distributed in large quantities at subsidized prices by various development partners, but this is not sustainable in the long run. Tissue culture plantlets are fragile, and their thriving depends on good management by nursery operators and farmers, especially in the early stages. This knowledge is currently mostly lacking. For nursery operators, the correct handling of plantlets in humidity chambers and shadehouses determines plantlet survival and quality. For farmers, plantlets need to be carefully and properly transported, and receive suitable water and fertilizer to fully reap the benefits.

Switching to tissue culture technology from conventional suckers requires different skills and knowledge for both nursery operators and farmers. For nursery operators, training in agronomic and technical know-how, while important, is not sufficient; nursery owners also need business and marketing skills to turn their nursery into a profit-making business. For farmers, the potentially higher production and more uniform harvesting times of bananas will require good business and marketing skills for them to fully benefit. Working together in groups has been shown (in Kenya and Southern Uganda) to strengthen the position of farmers within the banana value chain; however organizing into groups takes additional skills.

Promotion of tissue culture bananas has in the past been too focused on commercial tissue culture producers. Therefore, in 2008, a project was launched which aimed at developing improved and efficient pathways to deliver tissue culture plants to less commercial farmers. The project, titled 'Banana tissue culture: community dissemination pathways for delivery of high quality planting material to create markets for African farmers', was funded by the Federal Ministry of Economic Cooperation and Development (BMZ) and the Deutsche Gesellschaft für Internationale Zusammenarbeit (GIZ). The project built on an earlier phase that demonstrated potential for tissue culture technology with smallholder banana farmers. As part of the project, training was undertaken in East Africa of tissue culture nursery operators and farmers. In Burundi and Uganda, over 700 farmers were trained during more than 250 training sessions, and 150 nursery operators during 20 training sessions. In Kenya, farmers and nursery operators were trained together, and 75 training sessions were organized. The training courses were lengthy and detailed, with an individual farmer or nursery operator attending up to 40 training events over the course of 1–2 years. This manual, and the accompanying manual for training of farmers, are based on the training notes from these courses.

How to use this manual

This training manual can be used by anyone involved with training of nursery operators, such as extension agents or applied scientists. The manual is not intended as a guide for nursery operators themselves. The trainings were mostly carried out by a facilitator and an assistant from VEDCO and IITA.

The manual is organized into four modules, and each module is divided into sessions. The sessions are based on actual training sessions carried in Central Uganda. Each session was carried out and evaluated three or four times, with adaptation and fine-tuning along the way.

Most of the sessions are structured similarly: after listing the 'tools' (personnel and equipment), the activities are given as a series of steps. The actual content for each session is given below this, in a coloured box. Each session concludes with a Q&A section, which includes actual questions posed during the training.

We recommend that implementation of any training adheres as closely as possible to the format detailed within the manual. However, modifications according to geography and farmer conditions may be necessary.

The modules are organized in the order in which we recommend they be delivered, however they are largely stand-alone and can be interchanged. Within a module, however, the order of the sessions should remain fixed. The entire training course (all sessions from all modules) takes approximately 1–2 years if modules are run sequentially, however modules can be run in parallel to reduce the training period.

Some of the modules are relevant beyond tissue culture bananas, e.g. 'Business planning and business skills for nursery operators' and 'Marketing for nursery operators' can be applied to business activities beyond growing of bananas.

Brief overview of the modules

Module 1: Introduction to tissue culture bananas (one session)

Aims to raise interest among farmers and other entrepreneurs in starting a banana tissue culture nursery. Explains the basic processes in raising tissue culture bananas.

Module 2: Business planning and business skills for nursery operators (four sessions)

Introduces prospective nursery operators to business planning, including how to keep accurate records, and essential business skills such as benefit–cost analysis and how to access credit.

Module 3: Practical management of a banana tissue culture nursery (five sessions)

Explains all technical aspects related to management of banana tissue culture plantlets, from purchase at the tissue culture producer until sale to the customer. Includes: production of tissue culture plantlets, i.e. the entire production chain from the mother material until weaning in the nursery; the construction and use of humidity chambers and shadehouses; and transport and handling of tissue culture plants.

Module 4: Marketing for nursery operators (three sessions)

Explains basic marketing concepts, and begins development of the market chain by linking prospective nursery operators with tissue culture producers and tissue culture buyers.

Producing tissue culture bananas: a summary

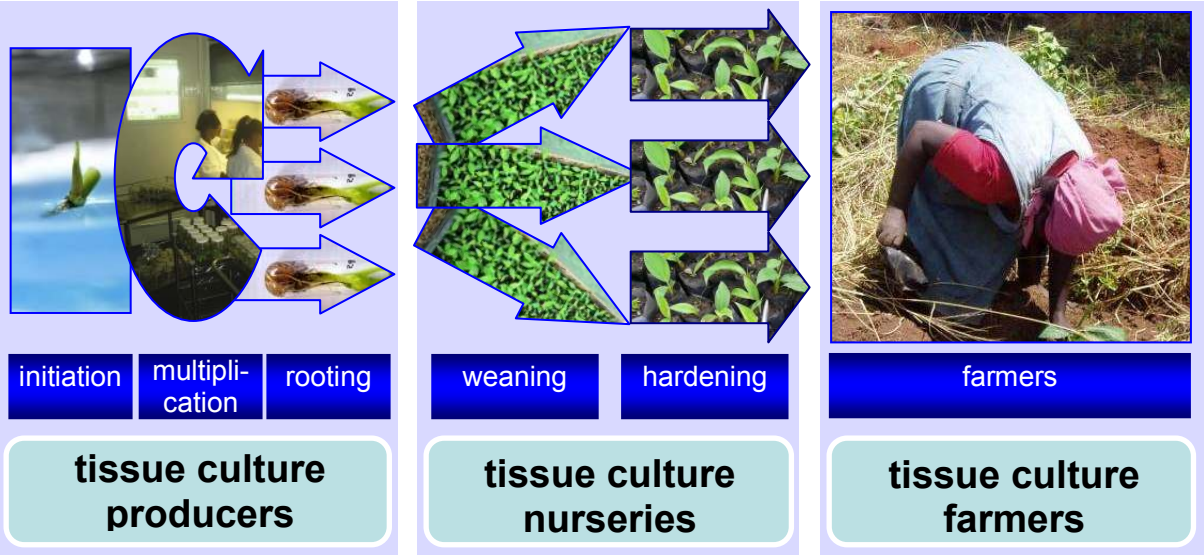

Specialized tissue culture laboratories (see table on next page) carry out the first stages of tissue culture banana production. These are:

1. Initiation: The meristem is taken from a plant in the field and transferred into sterile, specialized media in the laboratory, where the tissue develops into shoots.
2. Multiplication (1 cycle takes approx. 1 month): Each month, the tissue is subdivided and cultured. How often the tissue is subdivided and into how many shoot pieces depends on the tissue culture laboratory and banana cultivar, but with more multiplication cycles and shoots, the greater the number of plants generated.
3. Rooting: Further to the multiplication cycles, shoots are placed on rooting media for about 1 month where they are induced to form roots and produce banana plantlets.

Nursery operators then take the fragile plantlets and put them through weaning and hardening, before they are ready for selling to farmers:

4. Weaning (approx. 3 weeks): During this critical stage, plantlets are removed from and gradually weaned from the conditions within a tissue culture flask (100% relative humidity, sterile and no direct sunlight) to the environment of the shadehouse; weaning is usually accomplished using humidity chambers within the shadehouse.
5. Hardening (1–3 months, until sale to farmers): During this stage, weaned plants are exposed to the environment in the shadehouse which prepares them for field conditions.

Finally, farmers buy and grow the tissue culture plantlets, in much the same way as banana plants derived from suckers or corm pieces.

Commercial tissue culture laboratories in East Africa

Country	Name	Address	Contact
Burundi	Agrobiotec	P.O. Box 5667, Kinindo, Bujumbura, Burundi	Theodomir Rishirumuhirwa +257 22241972 agrobiotec2002@yahoo.fr
Burundi	Phytolabu	13 Route de Rumonge, Kinindo, Bujumbura, Burundi	Giovanni Forgione +257 22248724 giovanniforgione.phytolabu@yahoo.fr
Kenya	Jomo Kenyatta University of Agriculture and Technology (JKUAT)	P.O. Box 62000, Nairobi, Kenya	Esther Kahangi +254 726052879 estherkahangi@yahoo.com
Kenya	Mimea International	Nairobi, Kenya	Anne Mutsya +254 724644301 mimea_international@yahoo.co.uk, annkitisya@yahoo.com
Uganda	Agro-Genetic Technologies	P.O. Box 11387, Kampala, Uganda	Erostus Nsubuga +256 414371186 ewforce@yahoo.com
Uganda	Makerere University Plant Tissue Culture Laboratory	P.O. Box 7062, Kampala, Uganda	+256 414 533580 maktclab@agric.mak.ac.ug

Note : this is not necessarily a complete list.

Module 1
Introduction to tissue culture bananas

Overview

This module instructs trainers how to carry out an introductory session with prospective nursery operators. The introductory session explains the basic processes of production of tissue culture banana plants, and the business opportunity that a banana tissue culture nursery presents. It aims to stimulate interest among the participants so that they decide to attend future sessions and learn how to run a tissue culture nursery.

Structure

This training guide is structured as follows:

1. Planning for the training session:
    - Mobilizing participants
    - Preparing training materials
    - Obtaining materials and equipment needed for the session
    - Preparing the venue for the session.
2. Conducting the training session:
    - Delivering the content
    - Agreeing schedule, timing and location of subsequent training sessions with those participants who want to continue the training.

The training session is scheduled for 3 hours, and should be carried out in a single session.

Planning for the training session

Mobilizing participants

Purpose: To reach as many potential participants as possible, provide them with information about the training course and the first training session, and elicit feedback on likely attendance at the first session. Potential participants include anyone who is interested in running a banana tissue culture nursery, and may be people who are multiplying and selling banana plants (suckers), large-scale banana farmers, people who are already running a banana tissue culture nursery, people selling tree plantlets and fruit trees on the roadside, and any business-minded person who may see an opportunity in buying and selling banana tissue culture plantlets.

Personnel: One facilitator and one assistant (training team)

Supplies: Mobile phone, transport, computer(s), printer, recording material (pens, notebooks)

Time: Begin 2 weeks ahead of the intended date for the training session

Tasks

1. Prepare flyers for distribution to potential participants
2. Identify and contact key people who may help with reaching potential participants
3. Approach and provide information to potential participants, and collect feedback on the likelihood of them attending the training session
4. Follow-up with potential participants who showed interest, to remind them about the training session.

1. Prepare flyers

Flyers are intended to inform potential participants and stimulate their interest to attend the first training session. They should include the title of the training course (Training course for setting up and running a banana tissue culture nursery); the venue, date and time for the first training session (see Module 1); and a phone number for further information. The flyer should ideally be a single page, should be visually attractive, and should be produced in the relevant language or languages (Appendix 1).

2. Identify and contact key people

Key people who can help link the training team to potential participants include agricultural extension workers, banana tissue culture nursery operators, agriculture-related organizations such as NGOs, and influential people in the area such as religious leaders, businessmen, local council leaders and traditional leaders. Explain to the key people, either in a joint meeting or individually, the objectives of the training course and seek their help in reaching potential participants. This help could be passing on the flyers to potential participants, or providing names and contact information of potential participants.

3. Approach and provide information to potential participants, and collect feedback on the likelihood of them attending the training session

Distributing the flyers is a key way to reach and inform potential participants. The training team may distribute the flyers themselves, ask the key contacts to distribute them, or share the task. If the key

contacts are helping with distribution, the training team should provide practical assistance such as transport or fuel, mobile phone credit, books, pens and folders.

While distributing flyers, try to capture and record relevant information about the recipients, i.e. name, phone number, date of receiving the flyer, and whether they expect to attend the training session. This information will help to plan the training session. Use a feedback form to collect this information (Appendix 2). If key contacts are helping with distribution, provide them with feedback forms and ask them to try and collect the same information.

Other ways to reach potential participants include radio announcements, and displaying flyers in communal places such as marketplaces.

4. Follow up with potential participants to remind them about the training session

About 5 days before the training session, contact (by phone or visit) all the potential participants who showed interest in the training session and remind them of the date, time and venue for the session.

Preparing training materials

Purpose: To prepare training materials for use during (and after) the training session. The materials should inform participants about tissue culture bananas, and raise their interest in investing in a banana tissue culture nursery.

Personnel: Training team, people with experience in writing training materials

Supplies: Relevant literature, mobile phone, transport, computer(s), printer, recording material (pens, notebooks), markers

Time: Begin 3 weeks ahead of the intended date for the training session

Tasks

1. Review relevant literature
2. Consult people with experience in writing training materials
3. Prepare, review and print the basic training handout
4. Prepare any further materials, such as posters.

1. Review relevant literature

Review available literature on tissue culture bananas, as well as materials for other farming training courses.

2. Consult people with experience in writing training materials

Talk to people who have had experiences in writing farmer training materials to learn what it takes to successfully prepare them.

3. Prepare, review and print the basic training handout

After reviewing the literature and consulting experienced people, put together a draft training handout. This should then be shared with as many relevant technical people as possible, and their

comments used to revise and improve the document. Finalize and print as many copies as anticipated participants.

4. Prepare any further materials

Additional materials could include posters, flyers or brochures. Obtain or print as many copies as anticipated participants. Also, prepare the attendance form, for collecting information on participants (Appendix 3).

Obtaining materials and equipment needed for the session

Appendix 4 gives an example of the materials and equipment that might be needed for the training session. Plan and prepare a similar checklist for your session, and use it to collect all the necessary materials and equipment ahead of the session.

Preparing the venue

The venue must be agreed ahead of printing the flyers, so that this information can be included in the flyers.

The venue should be a banana tissue culture production facility. The following should be available for the training session:

- Banana tissue culture plantlets at all stages of growth
- A soil sterilization unit
- A plantlet weaning facility (humidity chamber) with plantlets undergoing weaning
- A plantlet hardening area (shadehouse) with plantlets at different hardening stages.

The venue should be arranged in four 'stations', which will be used to demonstrate the steps for producing tissue culture plantlets, as follows:

- Station 1: Introduction to the training course, and to the module. At this station all participants are addressed in one group. After the introduction at Station 1, participants are divided into groups of not more than 10 people and each group progresses through the remaining stations
- Station 2: Production of tissue culture banana plantlets
- Station 3: Soil sterilization
- Station 4: Weaning and hardening of tissue culture plantlets.

Ensure that each station has the necessary supplies and in adequate amounts ahead of the training.

Conducting the training session

Objectives

The training session has three objectives:

1. To introduce the training course and its aim and objectives to the participants
2. To introduce participants to the procedure for producing tissue culture bananas
3. To agree the schedule, timing and venue for subsequent modules with those participants who want to continue the training.

Personnel: A host (ideally the owner of a tissue culture facility); one facilitator and one assistant (the training team); three banana tissue culture lab technicians

Total time: 3–4 hours

Station 1: Introduction to the training course, and to the module

Personnel: The host, the training team

Time: 35 minutes

1. The training team should arrive at the venue at least 1 hour before the meeting to finalize the arrangements and organization of the venue, including ensuring each station is stocked with the relevant materials/equipments, pinning up posters, organizing sitting arrangements for the participants, etc.
2. As participants arrive, welcome them, show them where to sit and make them feel comfortable. Ask them to register using the attendance form.
3. The host opens the training session by welcoming the participants and the training team. The host asks the participants to introduce themselves one by one, including their name, where they live, how they got to know about the meeting, and their expectations from the meeting.
4. The host introduces the session. The introduction should include:
   - The purpose of the session, which is to introduce tissue culture bananas, and the business opportunity of running a banana tissue culture nursery
   - An overview of how banana tissue culture plantlets are produced
   - An overview of the business opportunity of running a tissue culture nursery, including:
     - How to access the plantlets
     - Current cost of tissue culture banana plantlets from production facilities
     - Current selling price of tissue culture banana plantlets from the nursery to farmers
     - Current demand for banana tissue culture plantlets
     - Any sales promotions that are currently available from tissue culture producers, such as discounts, credit sales, etc.
     - Requirements needed before starting a tissue culture nursery business (good training in management of the plantlets, capital, etc.).

5. The host then hands over to the training team. The members of the training team introduce themselves, including their name, the organization they work for, and their role on the training course.
6. The facilitator explains the objectives of the training course. These are:
   - Teach skills in banana tissue culture nursery operations
   - Link nursery operators to various sources of knowledge
   - Help nursery operators communicate and work together
   - Help nursery operators manage their business finances
   - Help nursery operators improve their marketing
   - If required, link nursery operators to financial institutions, especially credit facilities.

   The facilitator should explain that the training course cannot pay for attendance, transport or plantlets, or provide financial donations for prospective nursery operators to start a business. However, the training is provided free of charge.
7. Inform the participants about the other three modules that make up the full training course. Briefly describe the content of each, and why this knowledge is important for nursery operators.
8. Divide participants into groups of not more than 10 people, and explain that each group is to move through Stations 2, 3 and 4, in order, one group at a time. One group starts at Station 2 and the others wait until that group has moved on to Station 3; then another group begins at Station 2. Continue until all groups have been through all the stations, then gather the whole group together again at Station 1 for the closing session. Throughout the session, a member of the project team should be available to note and answer any questions from the participants at the different stations.

Content

A brief overview of the other modules in this training course.

Module 2: Business planning and business skills for nursery operators

In this module you will be introduced to the importance of having a business plan. To help you stay on top of your finances, and achieve the goals of your nursery, we will help you develop a business plan to keep track of your progress and profit. The module is divided into four parts. The first deals with the basics of business planning, the second is focused on business records, part three deals with benefit–cost analysis of tissue culture nursery operations, and the final part provides information on how to access credit.

Module 3: Practical management of a banana tissue culture nursery

This module contains all technical aspects related to management of banana tissue culture plantlets, from purchase at the tissue culture producer until sale to the customer. Briefly, it includes: production of tissue culture plantlets, i.e. the entire production chain from the mother material until weaning in the nursery; humidity chambers, for protecting plantlets from desiccation and pests (we will build humidity chambers during the module); shadehouses, for hardening plants after the humidity chamber, and providing protection before they are ready to be planted in the field (we will build shadehouses during the module); and transport and handling of tissue culture plants.

Module 4: Marketing for nursery operators

In this module you will be introduced to the importance of having a marketing plan. Just like the business plan, the marketing plan will give you direction and goals to work towards in order to achieve the best possible profit from your plantlet sales.

Questions and answers

Q1: Is the training going to help us set up our own tissue culture producing laboratory?

A1: No. The training will equip you with skills of caring for and growing plantlets after they have left the laboratory, and you will be able to make money by selling them when they have been weaned and hardened. Production of tissue culture plants is very expensive and requires different skills that are beyond this project.

Q2: Are the subsequent training sessions always going to be conducted here at this venue?

A2: Not necessarily. At the end of this session we will agree on the most convenient places, dates and times for the future trainings.

Q3: How long will the training course take?

A3: Each module has several sessions and each session takes a single day. Depending on the training schedule (e.g. weekly, bi-weekly, monthly), the entire training course could take 1.5 years.

Q4: Is there a demand for tissue culture bananas in Uganda?

A4: Yes. Tissue culture bananas are in high demand in all parts of the country to the extent that often the supply cannot meet the demand.

Station 2: Production of tissue culture banana plantlets

Personnel: Banana tissue culture laboratory technician

Supplies: Healthy looking suckers, 1 panga, 1 knife, water, clean nylon bag, detergent

Time: 35 minutes

1. Welcome the group of participants to your station.
2. Demonstrate the process of initiation, using clean suckers.
3. Take the group on a guided tour of the tissue culture laboratory. During the tour, show the participants the different stages the cube undergoes up to the time it leaves the laboratory in the test tube, ready for weaning. At the end, show them a culture bottle with plants that are ready to leave the laboratory for weaning.
4. Have a short question and answer session with participants, then move them on to the next station.

Fig. 1. Tissue culture banana plantlets ready to leave the laboratory.

Content

The process of initiation

1. Carefully select source materials (peepers or small sword suckers) that appear healthy (disease-free) and are growing vigorously.
2. Using a hoe or a panga, separate the sucker from the mother plant. This is called the 'ex-plant'.
3. Using the ex-plant, demonstrate the procedure of obtaining the material that is taken to the tissue culture laboratory for further manipulation as follows:
   - Clean the sucker by removing the soil and cutting off the roots to expose the corm. Cut off the pseudostem 30 cm above the base
   - Pack the ex-plant in a clean nylon bag, label properly and transport it to a clean environment for further manipulation
   - Wash the ex-plant using tap water to remove mud or other debris
   - Trim away the outer leaf sheaths, leaf bases, and corm tissue of the ex-plant until you have a $2 \times 2 \times 2$ cm^3 cube enclosing the shoot apex. Care should be taken to avoid cutting through the cube apex

– Clean the cube with clean water at least twice. Wash the cube further with water containing a strong detergent and then rinse off the detergent using clean water. Explain the purpose of using the detergent (to wash off any germs). Pack the cube in a clean container.

The stages for producing a tissue culture plantlet

1. The initiation process. The cube obtained from the ex-plant is placed on a multiplication-inducing culture medium. A growth regulator is added to the multiplication medium to speed up the process. The banana shoot-tip cultures are transferred to the incubators and maintained at an optimal growth temperature of 28 ± 2°C.
2. The multiplication process. The shoot tips start to develop. This can be promoted by adding to the medium relatively high concentrations of cytokinin, a growth regulator.
3. The regeneration process. Individual shoot or shoot clumps that have formed are transferred to a nutrient medium which does not promote further shoot proliferation but stimulates root formation (rooting media). After rooting, plantlets leave the laboratory for weaning.

Questions and answers

Q1: What is the estimated cost of setting up a tissue culture laboratory?

A1: It is not easy to come up with a figure, as some of the equipment is often provided by overseas donor agencies. The cost is, however, high.

Q2: When you wash the ex-plant in a strong detergent, doesn't this change the genetic make-up of the banana?

A2: No, it doesn't. The detergent simply cleans the ex-plants by killing microbes such as bacteria and fungi.

Q3: Can this technology be used to multiply our local cultivars?

A3: Yes, it can. Local cultivars like Mpologoma, Kisansa, Nakitembe and Musakala are already produced through tissue culture.

Q4: Are tissue culture banana immune to pests and diseases when planted in the field?

A4: No. Tissue culture plants are mostly free of pests and diseases at the time of planting, but once planted in the field they are susceptible to banana pests and diseases like other banana plants.

Q5: How long does it take to produce a plantlet by this method, before it is ready for planting in field?

A5: It takes 4–6 months, which is much faster than with normal sucker production. This is one of the advantages of this technology.

Q6: How many plantlets can be obtained from a single ex-plant?

A6: As many as 200 plantlets, depending on the number of subcultures that are performed during multiplication.

Station 3: Soil sterilization

Personnel: Banana tissue culture laboratory technician

Supplies: Sand, wheelbarrow, forest soil, hoe, manure, soil heating equipment, sisal bags, firewood, polythene bags, water, matches

Time: 30 minutes

1. Welcome the group of participants to your station.
2. Explain the importance of soil sterilization. This is done to destroy plant pathogens, pests and weeds which may be present in the soil, which is to be used for planting fragile plantlets that have just left the laboratory.
3. Demonstrate to participants the practical steps of soil sterilization.
4. Have a short question and answer session with participants, then move them on to the next station.

Content

Soil sterilization

1. Prepare the necessary materials: oil drum, water, fireplace and firewood, forest soil, sand, manure, hoes, spade, wheelbarrow and sisal bags.
2. Ensure the drum has no holes. Weld some strong metal pipes inside the drum, horizontally and approximately 30 cm from the bottom of the drum, to make a shelf for the soil sacks and keep them above the water.
3. Pour water into the drum up to approximately 25 cm from the bottom of the drum. The water should not touch the metal pipes.
4. Thoroughly mix the forest soil, the manure and the sand in the right proportions. Note that different nurseries use different proportions; the most common are: 5:2:1, 2:1:1 or 4:2:1 for forest soil:manure:sand.

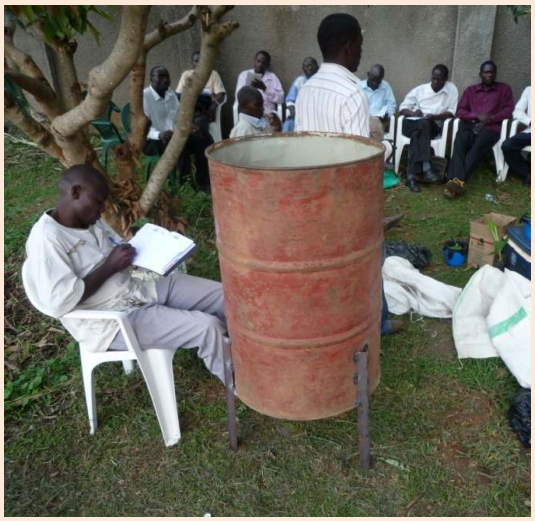

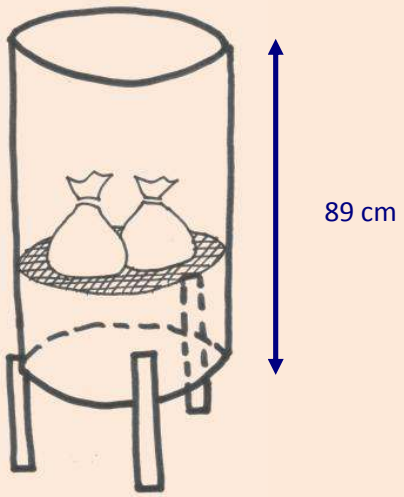

Fig. 2. Oil drum for soil sterilization.

5. Pack about 10 kg of the mixture into sisal sacks and lift them into the drum so that they sit on the metal pipes. When the drum is full, cover the top of the drum with sisal bag so that steam is retained when the drum is heated.
6. Proper sterilization of the soil depends on the amount of firewood used and the intensity of the fire. Generally, after 1–2 hours of a large enough fire, when steam is seen coming out of the soil, the soil should be fully sterilized.
7. When the soil is considered fully sterilized, remove the covering sisal bags and leave the drum to cool. After cooling, remove the sisal bags containing the soil mixture and pour the soil onto a clean surface, spreading it out to cool. It may take 2–3 hours, or overnight, before the soil cools completely and is ready to use.

Questions and answers

Q1: What should I do if I cannot access forest soil?

A1: The reason for recommending forest soil is that it is rich in nutrients. If not available, any good, dark soil, especially one obtained from a place that has not had crop cultivation for a reasonable amount of time, may be used.

Q2: Can I use chicken manure instead of cow manure?

A2: Both types of manure are good, and the type of manure you use depends on availability. However, chicken manure is used up faster than cow manure, so cow manure is better from that point of view.

Q3: Will the plantlets fail to grow if I do not sterilize the soil?

A3: The plantlets will grow, but you risk subjecting them to various pests and diseases at a stage when they are very fragile.

Q4: Do I also need to sterilize the soil in the field where I am going to plant the tissue culture banana plantlets?

A4: No, you only need to sterilize the soil for plantlets that have just left the laboratory for weaning and hardening. After that, the plantlets have been conditioned enough to grow in the external environment.

Q5: Can I substitute organic manure with inorganic fertilizer when making a soil mixture?

A5: Yes, but you need a lot of inorganic fertilizer, which will make the process very expensive. Organic manure is better because it has a soil binding element that is needed for good plant growth.

Q6: Is sterilized soil sold in shops that sell agricultural supplies?

A6: Unfortunately, we do not know of a single shop that sells sterilized soil at the moment. Anyway, it is better for a nursery operator to make their own soil mixture, since it cuts costs and also ensures quality.

Station 4: Weaning and hardening of tissue culture plantlets

Personnel: Banana tissue culture production technician

Supplies: Sterilized soil mixture, plantlets in culture bottles that have just left the laboratory, forceps, water, watering spray, watering can, humidity chamber, perforated small plastic containers, polythene bags, a shadehouse with plantlets at all stages of growth (1 week, 2 weeks, 1 month and beyond 1 month)

Time: 45 minutes

1. Welcome the group of participants.
2. Start by showing participants the structure of the humidity chamber. Explain the importance of the humidity chamber in the production of tissue culture plantlets.
3. Demonstrate how to remove plantlets from the laboratory culture containers and pot them into soil, before they go into the humidity chamber. Ask volunteer participants to repeat the process.
4. Explain the necessary conditions for the plantlets while in the humidity chamber.
5. Show participants the structure of the shadehouse, and plantlets undergoing hardening inside, at different stages of growth.
6. Demonstrate the procedure of hardening the plantlets in a shadehouse, and explain the importance of the shadehouse.
7. Explain the necessary conditions for the plantlets while in the shadehouse.
8. Explain the advantages, disadvantages, myths and facts associated with tissue culture plants.
9. Have a short question and answer session with participants, then move them back to Station 1.

Fig. 3. Filling polythene bags with sterilized soil.

Content

Importance of the humidity chamber

The humidity chamber helps the plantlets adapt to the external environment. While in the culture bottles, plantlets are under 100% relative humidity and lower light intensities. In the humidity chamber, they experience lower humidity and higher light levels, getting them used to conditions in the field.

Removing plantlets from laboratory culture containers and potting them into soil

1. After removing the plantlets from the culture bottles, rinse their roots to remove agar residue which could encourage development of pathogens. If the plantlet has long roots, shorten them to about 2–3 cm, since long roots may break and take more time to establish.
2. Plantlets coming out of the culture bottles are not of uniform size and may be clumped. Carefully separate any that are clumped, and sort them according to size.
3. Pot plantlets of the same size into small plastic containers (~150 ml) containing sterilized soil mixture. Up to five plantlets of the same size can be potted into one plastic container.

Conditions in the humidity chamber

- Temperature should be between 25°C and 35°C. Lower or higher temperatures can lead to poor plant development.
- Keep plantlets shaded. Shades can be constructed using sheeted bamboo poles, grass or leaves and placed on the roof of the humidity chamber. The chamber itself can be kept in a shadehouse or under natural shade (e.g. a tree).
- High relative humidity should be maintained by regular misting using a hand sprayer. Humidity can be gradually reduced over time.

Procedure for transferring the plantlets to a shadehouse for hardening

- Fill the polythene bags (~ 250–350 ml) or containers with a soil mixture and pour some water into the polythene bags.
- Carefully uproot the plantlets (coming from the humidity chamber) from their container, one at a time.
- Using your index finger or a rod, make an insertion into the moist soil within the polythene bag and carefully insert the uprooted plantlet in an upright position. Plant only one plantlet per bag or container. Cover its entire corm with the potting mix.
- Transfer the potted plantlet into the shadehouse for hardening. After about a month in the shadehouse, the plantlets are ready for planting in the field.

Conditions in the shadehouse

- Daily watering, either in the morning or in the evening; twice a day (morning and evening) during very dry conditions.
- Temperature between 15°C and 35°C, with an optimum of 25–30°C.
- A high standard of hygiene is necessary to reduce the risk of damage by pest or pathogens. Caterpillars and mites can be serious leaf pests in the shadehouse. Spraying plants with insecticides can be effective for the control of such pests.

Fig. 4. Potting plantlets.

- Partial shading is essential especially during the early stages in the shadehouse. Shade can be provided by using a special shadenet to cover the shadehouse.

Advantages and disadvantages of tissue culture banana plants

Advantages	Disadvantages
• Disease- and pest- free planting material • Little space needed for multiplying large numbers of plants • Uniform plantlets which provide for consistent plantation development • More vigorous plants, with shorter harvest-to-harvest periods and higher bunch weights • Prerequisite for cross-border traffic of planting material • Allows for faster distribution of superior germplasm • Can be used in gene banks to conserve plant genotypes for future use in research or agriculture	• Price of tissue culture planting material is usually double that of conventional sucker material • Better plant management and care is needed (watering, weeding and adding fertilizer), especially at early stages • Plantlets are easily infected with pests and diseases if transplanted in pest- and pathogen-infested soils • The number of different cultivars produced and sold by the laboratories may be limited, reducing genetic diversity in the planting material market

Fig. 5. Plantlets undergoing hardening.

Some myths about tissue culture banana plants

MYTH: Tissue culture banana plants cannot be attacked by any pests or diseases.

FACT: Tissue culture banana plants, just like an ordinary sucker, are susceptible to pest and disease attack. They are, however, free from pests and diseases when they are planted out (apart from viruses and some types of bacteria).

MYTH: Tissue culture bananas are flowers.

FACT: Tissue culture banana plants are not flowers. However, before being established in the field, they resemble a flower called *Strelitzia* spp.

MYTH: Suckers from tissue culture banana plants are also tissue culture plants.

FACT: Suckers from tissue culture plants are ordinary suckers just like the ones from ordinary banana plants.

MYTH: Tissue culture is a variety/cultivar.

FACT: Tissue culture plants are not a variety/cultivar. They are normal banana plants and can belong to any cultivar, depending on what cultivar the ex-plant belongs.

Questions and answers

Q1: Can banana tissue culture plants grow without going through the humidity chamber?

A1: Yes, they can, but you will experience much higher mortality and longer weaning periods.

Q2: How much does it cost to set up a humidity chamber?

A2: A humidity chamber is not complicated to set up – all you need is a tightly enclosed area, with no air coming in or going out. The cost depends on several factors: size, the quality and thickness of the polythene used, labour costs, etc. During our subsequent training sessions, we will review several types of humidity chambers and we will calculate the cost of each.

Q3: Where can I buy the containers that are used in the humidity chamber?

A3: Any plastic container up to 6 cm in length that can be perforated can be used. Some people have improvised by cutting mineral water bottles. At some companies, ice cream cups are used, which can be bought from shops in Kampala.

Q4: How much water is needed to keep the humidity at the required level within the humidity chamber?

A4: It is very important that, especially at the beginning, humidity is near 100%. The more airtight the humidity chamber, the less water is needed. Actual amount depends on the size of the chamber.

Q5: Where can I buy the recommended shadenet for the shadehouse structure?

A5: A couple of shops in Kampala deal in shadenets. It is however recommended to seek expert opinion before you buy one, as some are more suitable than others.

Q6: What is the cost of a simple shadehouse?

A6: Just like the humidity chamber, costs for shadehouses vary widely according to size or capacity of the shadehouse, the materials you use for support and roofing (metallic pipes or timber), labour costs, etc. During subsequent training sessions, we will demonstrate the different types of structures and you will calculate the costs for the structures you intend to set up.

Q7: What is the price of a single plantlet?

A7: The price of a single plantlet varies depending on the stage you are buying it. Depending on the supplier, plantlets in culture bottles (just after leaving the laboratory) cost ~1,200 Ugandan shillings (Ugsh; 1 US$ = 1,900 Ugsh on 1/1/10), whereas those that have been weaned (from the humidity chamber) or hardened (from the shadehouse) cost ~1,500 Ugsh. A discount is often given to those who buy in large quantities.

Q8: Can plantlets growing in the tissue culture nursery be attacked by pests or diseases?

A8: We try to maintain a clean environment to avoid banana pests and diseases, but plantlets in the nursery can be attacked by pests and diseases. Among the most common pests in the nursery are caterpillars which often feed on leaves. If they are a major problem in your nursery, you may opt to use an insecticide such as dimethoate, which can be bought from many agro-chemical shops. Be sure to consult the dealer and carefully read the instructions.

Q9: Can tissue culture plants wilt and die during transportation to the nursery?

A9: If transportation is not done properly, you may have plantlets wilt or die. In a subsequent session you will learn the best ways of transporting tissue culture plantlets.

Station 1: Closing session

Personnel: Training team

Supplies: Refreshments, business cards, flyers

Time: 25 minutes

1. When all the groups have visited all the stations, gather together the whole group at Station 1. Remind them of the other modules that the course is offering, and that it is free to attend.
2. For those participants who would like to continue with the training, make sure you have their names, contact information and address. Discuss and agree the date, time and venue for the next session with the participants. Tell them you will remind them about the session 5 days before the scheduled date.
3. Allow some time for participants to ask questions or clarifications, then thank the participants and close the meeting.

References (module 1)

Israeli Y, Lahav E and Reuveni O. 1995. In vitro culture of bananas. In: Gowen S (ed), *Bananas and Plantains*. Chapman and Hall, London, UK, pp 147-178.

Thaker MN and Jasrai YT. 2002. Increased growth of micro-propagated banana (*Musa paradisiaca*) with VAM symbiont. Plant Tissue Culture 12:147-154.

Vuylsteke DR. 1999. *Post-Flask Management of Micro-Propagated Bananas and Plantains*. International Institute of Tropical Agriculture (IITA), Ibadan, Nigeria.

Fig. 6. Plantlets in a shadehouse.

Appendix 1: Flyer for mobilizing prospective nursery operators

BANANA NURSERY TRAINING

- Do you operate a nursery?
- Do you sell banana seedlings?
- Do you want to have more income?
- Do you want to benefit from group sales?

Come to our free information day and learn about our nursery training program!

Date: Monday, 1 June 2009

Time: 9.00 AM

Venue: VEDCO Office, Kampala

Contact: 075 2xxxxxxxx

What is tissue culture

Tissue culture plants are normal banana plants that are pest and disease free. If you take care of them, they grow faster, are uniform and produce bigger bunches!

What is our training program

We want you to make more money from your nursery. We will start a training program very soon. We will form nursery operator groups and assist your group to market your tissue culture banana seedlings better. Over the course of the next several months, we will increase your skills in: nursery operations, business planning, financing, marketing, group initiation and dynamics, and group organization and records.

IITA VEDCO

Appendix 2: Feedback form for collecting information on potential participants

First Contact Form – Potential participants

Date: _ _ - _ _ - _ _ _ _ ID-Code: U-NEWNRS - _ _ _

☐ Likely to come ☐ Unlikely to come

Do you already know something about banana tissue culture? ☐ Yes ☐ No

Remarks: .....

.....

Would you like to make money from selling tissue culture banana plantlets?

☐ Yes ☐ No

Remarks .....

.....

Would you spend time on banana tissue culture business training? ☐ Yes ☐ No

Remarks .....

.....

<u>Contact details:</u> (acquired ☐ in person ☐ by phone)

Name:.....

Cell phone number: .....

Age: .....

Current major occupation:.....

<u>Location:</u>

District:.....

Town: .....

Village:.....

GPS coordinates:

Elevation: N/S: ..... E/W:.....

General remarks: .....

.....

Appendix 3: Attendance list

Attendance list for prospective nursery operators

Place of training: .....Date:.....

Training start time: .....Training end time:.....

No.	Name	Parish	Village	Phone no.	Signature
1					
2					
3					
4					
5					
6					
7					
8					
9					
10					
11					
12					
13					
14					
15					
16					
17					
18					
19					
20					

Appendix 4: Checklist for the preparation of the introductory meeting for prospective nursery operators

Checklist for the introductory meeting at Agro-Genetic Technologies, Buloba, Wakiso district

Meeting date: 26th June 2009

No.	Material	Source	Availability
1	Flipcharts	VEDCO	
2	Posters	VEDCO	
3	Markers	VEDCO	
4	Pens	VEDCO	
5	Books	VEDCO	
6	Refreshments (soda and water)	VEDCO	
7	News print	VEDCO	
8	Masking tape	VEDCO	
9	Flyers	IITA	
10	Attendance form	IITA	
11	Healthy looking suckers, panga, knives, water, clean nylon bag, detergent	AGT	
12	Well functioning tissue culture production facility/laboratory	AGT	
13	Soil sterilization unit equipped with forest soil, manure, sand, hoes, spades, wheelbarrows, sisal bags, oil drum for heating the soil, firewood, etc.	AGT	
14	Clearing house/space where plantlets from the laboratory are received, deflasked and prepared for the weaning stage. This area should have: plantlets in culture bottles, sterilized soil mix, containers used for potting plantlets heading for the humidity chamber, etc.	AGT	
15	Humidity chambers with plantlets at different stages of weaning, water spray, etc.	AGT	
16	Shadehouses with plantlets at different stages of hardening, watering cans, plastic bags (polythene) used for potting plantlets ready for hardening, sterilized soil mix	AGT	

Module 2
Business planning and business skills for nursery operators

Overview

Objectives

The objectives of this module are: (1) to help prospective tissue culture nursery operators make the decision whether to invest money into a nursery business based on sound benefit–cost analysis and (2) to equip them with essential business skills required to run a nursery.

Structure

The module comprises the following sessions:

- Session 1: Introduction to business planning and record keeping
- Session 2: Types of records necessary for nursery operators
- Session 3: Benefit–cost analysis
- Session 4: Accessing credit.

Sessions 1, 2 and 4 can be completed in a single training session, while Session 3 needs two separate sessions on different days. The entire module should take about 2 months to complete (~2 sessions/month).

All sessions should be held in a convenient classroom or other meeting place.

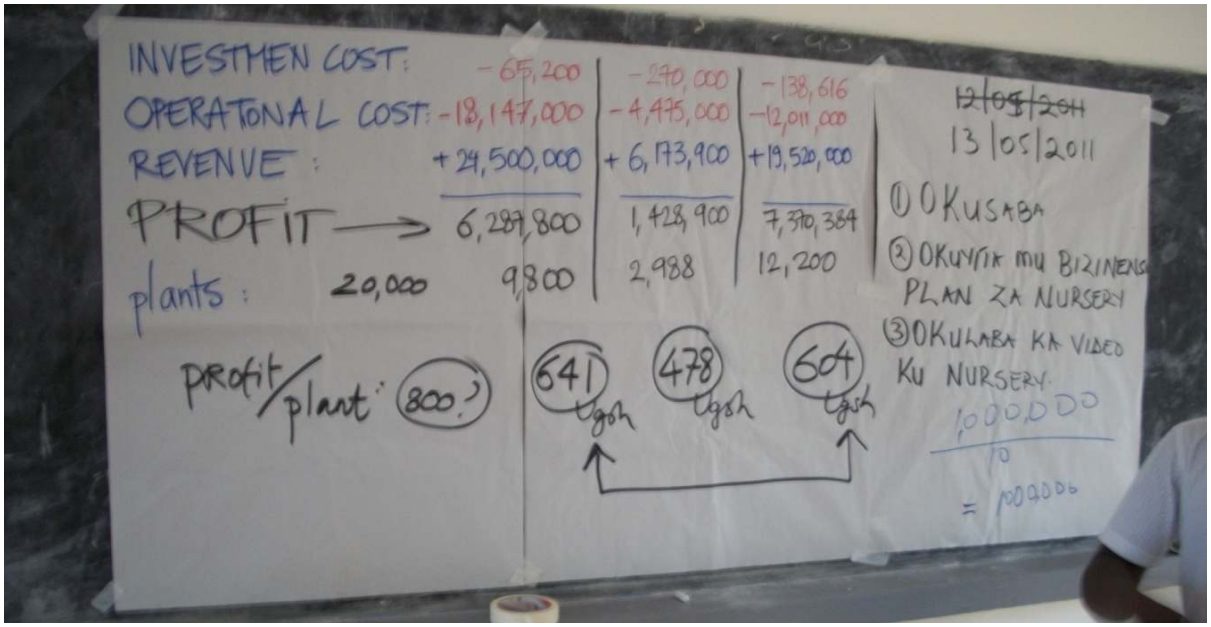

Session 1: Introduction to business planning and record keeping

Personnel: One facilitator and one assistant (training team)

Supplies: Box of markers, flipchart, masking tape, refreshments, books and pens for participants

Time: 1 hour 30 minutes

Preparing for the session

Write the title of the module (Business planning and business skills for nursery operators), the topic of the day (Introduction to business planning and record keeping) and the questions that will guide the day's training on separate pages of the flipchart ahead of the training. The questions are:

- What is a business plan?
- Why is business planning important?
- What is record keeping?
- Why is it important to keep records?

Conducting the session

1. Open the day's session by displaying the flipchart with the title of the module. Give a brief overview of the module.
2. Display the title of the session, and the questions one by one. Have participants brainstorm on each question, and write down the responses on the flipchart. Encourage participants to provide examples where appropriate. Where necessary, supplement the discussion.
3. Wrap up the training session as follows:
    - Briefly recap the day's session
    - Communicate the topic of the next session (Keeping records), and the date, time and venue for the session. Ideally the venue will be the same as the current session. Remind participants to bring their pens and books to the next session.

Content

What is a business plan?

A business plan is a written description of your business's future. It's a document that describes what you plan to do and how you plan to do it. A business plan is built on the principles of improving production, increasing profits and/or ensuring sustainability for the business output.

The importance of business planning

A business plan helps an entrepreneur to do the following.

1. Set business goals, which clarify the following:

   – Where is the business going?

   – What needs to be done?

2. Compare the progress of the business with the goals, so that appropriate adjustments can be made.

3. Communicate better about the business. For example, business goals in a business plan can be easily explained to other people (e.g. financial institutions, prospective business partners, shareholders), which could benefit the business.

4. Obtain capital from private investors, lenders, banks, etc. who will be more likely to invest in a well-planned business.

5. Good business planning serves as tangible evidence of your ability to manage, plan and communicate – skills that are needed to operate a successful business.

What is record keeping?

Record keeping is the process of keeping, filing, categorizing and maintaining financial and production information about the business. Record keeping can be accomplished through a variety of methods, from a basic hand record keeping method to an elaborate computerized system. Good records enable business managers to evaluate the performance of their businesses. The evaluation process allows business managers to make informed decisions based on actual (or projected) business performance. Therefore, establishing and using an effective business record keeping system is important for the success of a business.

Key information to be recorded includes:

- Costs incurred: this information can be summarized by week, month and year
- Sales prices received for products sold
- Total sales
- Clientele contact information.

The importance of record keeping

1. Business records allow to calculate precisely the operational costs, sales and gross margins associated with the business in a given time period. Records also allow a business owner to compare the financial situation in a current season with previous years.

2. Business records can be analysed over time to identify trends, and help entrepreneurs plan appropriately. Trends can include fluctuations in purchase prices, demand for plantlets, etc.

3. Business records allow entrepreneurs to know which of their products are making profits and which ones are running at a loss.

4. Business records show how much cash is owed to a nursery owner at any time, and how long this credit been outstanding.

Questions and answers

Q1: Are the skills we are learning in this module applicable to farm enterprises other than tissue culture banana nurseries?

A1: Yes, the concepts we are learning can be used for all farm enterprises.

Q2: Would you call a receipt book a record?

A2: Yes. Anything that is written down to reflect a transaction or an activity is a record.

Q3: How would you advise someone who cannot write to keep records?

A3: They should try and get a relative or friend to help them write the farm records.

Q4: Can I use an exercise book as a records book?

A4: Yes, you can use an exercise book to record your information.

Session 2: Keeping records

Personnel: One facilitator and one assistant (training team)

Supplies: Box of markers, flipchart, masking tape, refreshments

Time: 2 hours

Preparing for the session

Prepare templates of the different records necessary for nursery operators to capture essential information. These are: sales receipt (Appendix 1), delivery note (Appendix 3), invoice (Appendix 5), and a business contract (Appendix 7). Print enough for groups to use during the session, and for each participant to take home a set of the four record templates.

Write the topic of the day (Keeping records) and the questions that will guide the day's training on the flipchart ahead of the session. The questions are:

- What information do nursery operators need to record?
- What are the different types of records necessary when operating a business such as a banana tissue culture plant nursery?

Conducting the session

1. Have a volunteer participant briefly recap the content of the previous session.
2. Open the day's session by displaying the flipchart with the title of the session.
3. Display the questions guiding the day's session one by one, and have participants brainstorm on each of them. Write down the responses on the flipchart. Encourage participants to provide examples where appropriate. Where necessary, supplement the discussion.
4. Discuss the four types of business records. For each one, ask participants to define its purpose and the type of information it captures. Have participants form groups of 3-4 people, give each group a template of the business record that is being discussed, and have each group record information into the template. Each group should use data that reflect their experiences. If the group has no experience running a nursery, imaginary data can be used. The actual figures used in the templates are not so important at this stage – it is the process that the participants are learning that is important. Ask at least two groups to share their experience regarding adding information into the template.
5. Provide each participant with blank templates for each of the four business records to take home, and encourage them to use these to continue familiarizing themselves with the records.
6. Wrap up the session as follows:
    - Briefly recap the day's session
    - Communicate the topic of the next session (Benefit–cost analysis) and the date, time and venue for the session. Ideally the venue will be the same as the current session
    - Remind participants to bring their pens, books and templates of the record forms to the next session.

Content

What information do nursery operators need to record?

- Incomes and costs as soon as they are incurred. These should be summarized periodically, e.g. by week, by month, quarterly or annually. By comparing annual incomes to the annual costs, a nursery operator can determine whether he or she has made a profit or a loss over a given period, e.g. a production cycle or a year.
- Sales prices received from buyers every time a sale is made. This helps a nursery operator determine periods when the best prices are paid or identify buyers who offer a better price.
- Total sales made (including information on volume, cultivars and unit price). This enables a nursery operator to compare sales with previous years and make a forecast for future years.
- List of clients who purchase plantlets, with their contacts and location. This list can be used by the nursery operator to inform potential clients about new stock, new cultivars in the product mix, possible business promotions, etc. Also, the list can help the operator to obtain feedback from the clients about their experiences with the plantlets purchased, which can be useful to the nursery operator, and also builds good customer relations.

The types of records needed by nursery operators

The four essential records are: (1) sales receipt, (2) delivery note, (3) invoice and 4) business contract.

Sales receipt

A sales receipt is a document that records:

- The purchase date
- Items purchased
- Number of units of each purchased item
- The unit purchase price
- The total purchase price.

Other information that should be on the sales receipt includes:

- The name and location of the store or nursery where the purchases were made
- The method of payment used (cash, money transfer or cheque).

Appendix 1 is a blank template for a sales receipt, and Appendix 2 is a sample of a completed sales receipt.

Delivery note

A delivery note is a document accompanying a shipment of goods that includes the description, condition, and quantity of the goods delivered. The delivery note indicates that goods have been delivered to the intended destination and in the right condition. The seller fills the delivery note and the buyer, on delivery, checks the delivery note and signs it if they are happy that all is correct. A copy of the delivery note, signed by the buyer, is subsequently returned to the seller as a proof of delivery.

Appendix 3 is a blank template for a delivery note, and Appendix 4 is a sample of a completed delivery note.

Invoice

An invoice is a document issued by a seller to the buyer, indicating the products, quantities, and agreed prices for products or services the seller has provided to the buyer. An invoice indicates the buyer must pay the seller, according to the payment terms. The buyer has a maximum amount of days to pay for these goods and is sometimes offered a discount if paid before the due date.

An invoice can be divided into three main parts: the header, body and footer.

The invoice header is the top part of the form and includes:

- Letterhead: business name, address, telephone, and any e-mail and web address
- An invoice number: this is a running serial number, and you should only have one number per invoice issued
- The invoice date
- Payment terms – how soon you expect to be paid
- Customer or client name and address.

The invoice body is the middle part of the form and includes a description of the goods you are supplying, quantity, unit of measure, price per unit and total amount for individual items.

The invoice footer is the bottom part of the form and includes:

- The total amount of all individual items
- If applicable, a tax amount and total after tax
- Payment instructions, if necessary; e.g. tell recipients how to make out their cash or cheque payment; if you expect payments by wire transfer, you should provide your bank account number and details.

Business contract

A business contract is a legally binding agreement between two parties for exchange of services or goods. For a contract to be valid, an offer must be made and accepted. Using a contract in business dealings helps ensure an agreement is acted on. Failure to honour a contract could result in a lawsuit or out-of-court settlement and payment of damages by the party that fails to honour the contract. The best way to avoid a dispute or potential litigation is to craft a solid business agreement in which you are confident you have negotiated the best terms for your business.

There are two types of business contracts.

- Oral business contracts: this is a spoken agreement that is as valid as a written contract. Oral contracts are legally enforceable, although they are frequently subject to misinterpretation and they can be difficult to prove in court because they often come down to one person's word against the other.
- Written business contracts: these are produced on paper or electronically. Legally, a written business contract is easier to uphold than an oral contract because there is a reference for the agreement. With a written contract, it is easier to prove the terms between the parties and eliminate arguments over who said what.

A business contract should be labelled 'contract' or 'agreement' at the top. These are some items it can include:

- The date of the contract
- Names of the parties involved

- Details of the services that your company will provide or receive
- Payment amounts
- Payment due dates; payments do not need to be made in a lump sum, instead you can make or receive smaller payments for specific services as they are completed
- Interest terms for late payments
- Deadlines for services
- Expiry date for the contract
- Renewal terms
- Damages for breach of contract
- Termination conditions
- Signatures of the parties and any witnesses.

Questions and answers

Q1: If I make a verbal contract with a buyer to supply him or her plantlets on credit, and he or she fails to pay, how do I present my case to the authorities without any written information?

A1: Verbal contracts are not recommended as you have no evidence what was agreed. There is not much you can do in this situation.

Q2: When making a business contract with a client, what is the maximum duration I should specify in the contract?

A2: This depends on the two parties involved in the contract, however you are advised to start with short term contracts of not more than one month. If a client honours his first contract, you could extend the next contract duration.

Q3: Can I start operating a banana tissue culture nursery without all the documentation we have learned about?

A3: You can start operating a tissue culture banana nursery without the documentation, but it is much better, and strongly recommended, to plan the business properly and keep business records.

Q4: Do I need a lawyer when making a business contract with my clients?

A4: No, you don't need a lawyer. You could have one or two witnesses when you sign a business contract, to make the contract more binding and the client more likely to honour it.

Q5: Do I need to write a sales receipt for small sales?

Q5: You are advised to write a sales receipt even for small sales, to help you track your business properly and accurately.

Session 3: Benefit–cost analysis

Personnel: One facilitator and one assistant (training team)

Supplies: Box of markers, laptop, projector, calculators, flipchart, paper for flipchart, masking tape, refreshments

Time: 4–5 hours, carried out in two separate meetings (2-2.5 hours each) on different days

Preparing for the first meeting

The first meeting looks at the fixed costs associated with running a nursery, i.e. costs associated with building a humidity chamber and a shadehouse.

1. Make templates that can be used for costing construction of humidity chambers and shadehouses for a banana tissue culture nursery business (Appendices 8, 9 and 10). Print out enough copies so that each participant can take home one of each, and each group of two–three participants can work with one of each during the meeting.
2. Write the topic of the day (Benefit–cost analysis: fixed costs) and the questions that will guide the day's session on different pages of the flipchart ahead of the session. The questions are:
   - What materials are needed to construct a humidity chamber?
   - What are the costs of the materials needed to construct a humidity chamber?
   - What materials are needed to construct a shadehouse?
   - What are the costs of the materials needed to construct a shadehouse?
   - What are the costs of materials needed to run a tissue culture nursery business?
   - What is depreciation of assets? How do you compute depreciation of assets?
3. Prepare a slide show (computer and projector) showing pictures of different types of humidity chambers and shadehouses. Include a range, from simple, inexpensive structures to more sophisticated, expensive ones. The presentation should be planned so that it does not last more than 10 minutes.
4. Make sure ahead of the meeting that the venue has a large white wall, is shaded and has functional electricity sockets. If it is not possible to have a presentation with a computer and projector, print out several photos of humidity chambers and shadehouses, in colour if possible, to show to participants.

Conducting the first meeting

1. On the day of the meeting, the training team should arrive at the venue at least one hour before the meeting is due to start, to set up for the presentation, ensure that the venue is shaded and arrange the seating so that participants can see the presentation clearly.
2 Have a volunteer participant briefly recap the previous session. Ask if any participants need more clarification on the business record forms that were covered in the previous session. Proceed with the day's session after any clarifications.
3. Display the flipchart with the title of the meeting.

4. Give the presentation on the different types of humidity chambers and shadehouses. If a presentation with a computer and projector is not possible, distribute coloured photos showing the structures. Draw attention to the different materials and inputs each construction needs.
5. Display the questions on the flipchart one by one, and have participants brainstorm on each of them. Write down the responses on the flipchart. Encourage participants to provide examples where appropriate. Where necessary, supplement the discussion.
6. Have participants form groups of two or three people. Give each group a copy of the three templates for costing the construction of humidity chambers and shadehouses and the tools required to run a tissue culture nursery business (Appendices 8, 9 and 10). Groups should choose the type of humidity chamber and shadehouse they are interested in (low cost, medium cost or high cost), and then attempt to cost the various inputs they would need for the constructions. All the materials used are available within the local communities, and participants should have a good knowledge of actual prices of input materials. However, the actual numbers are not so important at this stage – it is the process that is more important. Participants can add items to the templates that they think should be included. The exercise should take up to 45 minutes. Offer advice and help as necessary during the exercise. After 45 minutes, ask each group to present their budgets for their humidity chamber and shadehouse.
7. Wrap up the meeting as follows:
   - Briefly recap the day's session
   - Distribute blank templates (Appendices 8, 9 and 10) to every participant and encourage them to try and do their own individual computations for the types of humidity chamber and shadehouse they wish to invest in. Encourage the participants to fill the templates before the next meeting
   - Communicate the topic for the next meeting (Benefit–cost analysis: operational costs) and the date, time and venue for the meeting. Ideally the venue will be the same as the current meeting
   - Remind participants to bring their pens, books and the completed templates to the next meeting.

Preparing for the second meeting

The second meeting focuses on operational costs and the benefits or returns associated with a nursery business.

1. Make templates that can be used for budgeting for all operational costs (materials and labour; Appendix 11) and revenues (Appendix 12) for running a banana tissue culture nursery business. Include another sheet or table that can be used to summarize input costs, operational costs and revenues for a tissue culture nursery business (Appendix 13). Print out enough copies so that each participant can take home one of each, and each group of two-three participants can work with one of each during the meeting.
2. Write the topic of the day (Benefit–cost analysis: operational costs) and the questions that will guide the day's session on different pages of the flipchart ahead of the session. The questions are:
   - What are the operational costs for a banana tissue culture nursery business?
   - What revenues are expected from operating a banana tissue culture nursery business?

Conducting the second meeting

1. Have a volunteer participant briefly recap the previous training. Ask if any participants used the templates that were provided at the end of the previous session to calculate the budget for his/her desired humidity chamber and shadehouse. If attempts were made, go through these with the participants.
2. Display the flipchart with the title of the meeting. Display the questions on the flipchart one by one. Ensure the participants understand the question, and encourage them to ask questions. Have participants brainstorm on each of them and write down the responses on the flipchart. Where necessary, supplement the discussion.
3. Have participants go back to the groups they formed during the previous meeting. Give each group a copy of the templates for capturing operational costs and revenues (Appendices 11 and 12), and have the groups calculate the operational costs and revenues. Participants should use their own experience and that shared during the plenary discussions to come up with relevant figures. The actual figures are not so important at this stage – it is the process that the participants are learning that is important. Participants can add items to the templates that they think should be included. The exercise should take up to 30 minutes. Offer advice and help as necessary during the exercise.
4. After 30 minutes, give each group the summary template (Appendix 13) for capturing the costs of construction of the humidity chamber and shadehouse, the operational costs, and the benefits from operating a banana tissue culture nursery business.
5. Working with the groups, help the participants to insert figures into the summary sheet. Then have each group compute their benefit–cost analysis, and present it to the main group.
6. Remind participants of the overall purpose of this session, which to help participants assess if the business opportunity (buying and selling tissue culture plantlets) is profitable and worth undertaking.
7. Wrap up the meeting as follows:
    - Briefly recap the day's session
    - Distribute blank templates to all participants and encourage them to use these to do their own computations and benefit–cost analysis based on their desired investment plans
    - Communicate the topic of the next session, which is the first session of the next module and will show participants how to construct a humidity chamber and a shadehouse. Communicate the date, time and venue for the session.

Content

Fixed costs

Fixed costs are expenses that do not change as a function of the level of production or sales of the business within a given period of time. The costs associated with building humidity chambers and shadehouses, as well as the cost of the tools used to build them, are examples of fixed costs.

Humidity chambers

Humidity chambers can be simple or sophisticated, as long as they provide the essential 100% humidity for the plantlets during the weaning process.

Various materials can be used when constructing humidity chambers. The frame can be built from wooden sticks, metal pipes or timber. Polythene foil or sheet is most commonly used on the frame, to enclose the chamber. The cost of constructing a humidity chamber depends on the materials used and size.

Fig. 1. A low-cost humidity chamber made by wrapping polythene sheeting around a frame of wooden sticks.

Fig. 2. A medium-cost humidity chamber made by wrapping polythene sheeting around a metal frame.

Fig. 3. A medium-cost humidity chamber made by wrapping polythene sheeting around a timber frame.

Shadehouses

Shadehouses also vary in sophistication and cost, for example:

- Simple shadehouses made from locally available materials such as bamboo or other wooden sticks, with a roof made from mats of leaves or papyrus. These are usually inexpensive but are not long-lasting.
- Medium-cost shadehouses built with timber and polythene sheeting as cover.
- Stronger structures constructed from metal pipes grounded in concrete slab with chain links and/or shadecloth as cover, and stone chippings on the floor.
- Specialized shadehouses or solar domes. These can be purchased from professional nursery suppliers, but are usually expensive.

Fig. 4. Low-cost shadehouse built with timber and grass.

Fig. 5. A medium-cost shadehouse built with shadenets, metallic poles, cement and bricks.

Costs of constructing humidity chambers and shadehouses

The cost of constructing a humidity chamber or a shadehouse depends on the materials used, the size (capacity), sophistication of the design, the cost of transport of materials to the site, and labour costs. Below are some example costs for the different types of humidity chamber and shadehouses (see Appendices 8 and 9).

Table 1. Costs of constructing a low-cost humidity chamber, capacity 800 plantlets (Fig. 1).

Description	Quantity	Unit cost	Transport and/or related labour cost	Total cost (Ugsh)[a]
Polythene sheeting	5	3,500	–	17,500
Bricks to hold the polythene on the ground	20	100	–	2,000
Timber/sticks forming the flame	–	–	–	7,500
Glue for holding polythene on the pipes	1	5,500	–	5,500
Labour (cutting and welding metallic pipes)	–	–	–	5,000
Total				**37,500**

[a]Ugsh = Ugandan shillings (1 US$ = 1,900 Ugsh on 1/1/10).

Table 2. Costs of constructing a medium-cost humidity chamber, capacity 1200 plantlets (Fig. 2).

Description	Quantity	Unit cost	Transport and/or related labour cost	Total cost (Ugsh)
Polythene sheeting (meters)	5	3,200	–	16,000
Metallic pipes	3	20,000	–	60,000
Glue for holding polythene (100 ml)	1	5,500	–	5,500
Labour for processing metallic pipes	–	–	–	35,000
Total				**116,500**

Fig. 6. Examples of high-cost/large humidity chambers/shadehouses.

Table 3. Costs of constructing a medium-cost shadehouse, capacity 2,500 plantlets (Fig. 5).

Item	Quantity	Unit cost	Total cost (Ugsh)
Shadenet (70 m)	70	6500	455,000
Sewing of shadenets	–	–	30,000
Metallic pipes	10	20,000	200,000
Metallic plates (for holding the pipes)	8	2,500	20,000
Binding wire	1	80,000	80,000
Holding rod	1	16,000	16,000
Black paint (to prevent pipes from rusting) (liters)	0.5	20,000	10,000
Door pipes	2	20,000	40,000
Patter	1	5,000	5,000
Stipule	1	2,000	2,000
Padlock	1	5,000	5,000
Door angle	1	25,000	25,000
Cement (50 kg bag)	1	25,000	25,000
Bricks	120	100	12,000
Sand (wheelbarrow)	5	3,000	15,000
Labour (including cutting metallic pieces, welding charges, setting up the structure)	–	–	250,000
Total			**1,190,000**

Table 4. Costs of constructing a medium-cost shadehouse, capacity 2,000 plantlets (Fig. 5).

Item	Quantity	Unit cost	Transport and/or related labour cost	Total cost (Ugsh)
Materials				
Bricks	1,500	80	–	120,000
Cement (50 kg/bag)	1	27,500	1,000	28,500
Sand (2 tonnes/truckload)	1	40,000	–	40,000
Metallic pipes	10	15,000	5,000	155,000
Wooden poles	6	1,000	2,000	8,000
Gravel (wheelbarrow)	8	1,500	–	12,000
Shadenet	1	270,000	10,000	280,000
Nails (kg)	1	7,000	–	7,000
Door and padlock	1	15,000	–	15,000
Water for construction (20 liters/jerry can)	30	100	–	3,000
Subtotal materials				**668,500**
Labour				
Casual construction labour	2	7,500	–	15,000
Subtotal labour				**15,000**
Total				**683,500**

Table 5. Budget for tools needed for operating a nursery with capacity for 3,000 plantlets.

Item	Quantity	Unit cost	Transport and/or related labour	Total cost (Ugsh)
Spade	1	6,000	0	6,000
Old oil drum	2	20,000	0	40,000
Watering cans	1	6,000	0	6,000
Watering spray for humidity chamber	1	16,000	0	16,000
Potting bags	3	7,000	3,000	24,000
Total				**92,000**

Operational costs

Operational costs are the expenses which are related to the operation of a business. These costs increase if production increases.

Below is an example budget for operational costs for a banana tissue culture nursery business (see Appendix 11).

Table 6. Example budget of the operational costs for a banana tissue culture nursery with holding capacity of 3,000 plantlets for one season.

Item	Quantity	Unit cost	Transport and/or related labour cost	Total cost (Ugsh)
Materials				
Forest soil	2	40,000	–	80,000
Sand	–	–	–	–
Manure	10	3,000	–	30,000
Firewood	40	1,000	–	40,000
Polythene bags	6	7,000	3,000	45,000
Plantlets (before hardening)	3,000	1,200	45,000	3,645,000
Chemical plant protection	2	2,000	–	4,000
Water	100	200	–	20,000
Stationery	–	–	–	–
Subtotal				**3,864,000**
Labour				
Casual labour for potting plants	3,000	100	–	300,000
Semi-skilled labour	–	–	–	
Subtotal				**300,000**
Other costs				
Trading license	–	–	–	–
Repairs	1	5,000	–	5,000
Maintenance	–	–	–	–
Land cost/rent	–	–	–	–
Marketing cost	1	20,000	–	20,000
Credit cost	–	–	–	–
Subtotal				**25,000**
Total				**4,189,000**

Benefits (revenues) associated with a tissue culture nursery business

Table 7 shows an example of revenues received by a nursery operator over two seasons. Appendix 12 is a template that can be used for recording revenues.

Table 7. Revenues for two planting seasons between September 2010 and August 2011 for a nursery in Luwero district.

Sales/season		Quantity	Sales price	Total revenue (Ugsh)
Season 2 (2010)	Sale 1	3,000	2,000	6,000,000
	Sale 2	2,400	1,900	4,560,000
	Sale 3			
	Sale 4			
Season 1 (2011)	Sale 1	1,000	2,000	2,000,000
	Sale 2	3,000	1,300	3,900,000
	Sale 3	1,800	1,700	3,060,000
	Sale 4			
Grand sales				**19,520,000**

Benefit–cost analysis

Benefit–cost analysis is a relatively simple and widely used technique for deciding whether to make a change in an existing business or whether to invest in a given business opportunity. In simple terms, it compares costs against benefits to work out whether the entrepreneur will be likely to make a profit or a loss from the venture, and therefore whether they should go ahead.

Table 8 shows a simplified example of a benefit–cost analysis for a tissue culture nursery business. Appendix 13 is a template that can be used for benefit–cost analysis.

Table 8. Benefit–cost analysis for a nursery operator in Luwero district.

Items	Amount (Ugsh)
Investment costs for construction of a shadehouse	1,131,000
Investment costs for construction of a humidity chamber	–
General tools required for operating a nursery business	219,000
Total investment costs	**1,350,000**
Depreciated investment costs over 5 years	270,000
Operational costs (annual)	4,475,000
Benefits (annual revenues from sale of plantlet sales)	6,173,900
Total net value (benefits –operational costs)	**1,698,900**
Profit (total net value – depreciated investment costs)	**1,428,900**
Benefits/operational costs	**1.37**

Depreciation of assets

Depreciation of an asset refers to the reduction in value of an asset with the passage of time, due in particular to wear and tear. As business assets are used, their value falls. Depreciation of assets is one of the costs for a business.

How to compute depreciation of assets

The information needed to compute depreciation expense includes:

- Original cost of the asset
- Expected salvage value, also known as residual value of the asset, i.e. the value of the asset at the end of its useful life
- Estimated useful life of the asset
- A method of apportioning the cost over such life (e.g. straight-line method).

There are several methods for calculating depreciation, generally based on either the passage of time or the level of activity (or use) of the asset. The straight-line method is the simplest and most often used technique.

Formula for computing depreciation using straight-line method:

Annual depreciation expense = (cost of fixed asset – residual value) / useful life of the asset (years)

For example, a shadehouse constructed with a budget of 1,000,000 Ugsh, a life of 5 years, and a salvage value of 200,000 Ugsh, will depreciate at 160,000 Ugsh per year: (1,000,000 − 200,000) / 5 years = 160,000 Ugsh.

Questions and answers

Q1: What are the risks associated with operating a banana tissue culture nursery?

A1: Like all businesses, a banana tissue culture nursery business has some risks. These include plantlets dying especially during transportation from the tissue culture producer due to exposure, pests such as caterpillars attacking the plantlets, theft, and lack of a market. However, all these risks can be minimized. For example, plantlets dying during transportation can be avoided by transporting the plantlets during the evening hours when the sun is down, or covering the carrier (truck) with a shadenet while ensuring enough aeration. Control of pests can be achieved by using appropriate pesticides.

Q2: How can I estimate how many plantlets will be wanted by the buyers?

A2: Determining the demand for your plantlets is very important before you attempt to stock. During the module on marketing, you will learn how to assess and create a market for your plantlets.

Q3: Can I stock plantlets all year-round?

A3: With the help of a good shadehouse, it is possible to stock plantlets throughout the year. It may however not be profitable since the demand for plantlets is seasonal. The best option is to ensure that you have plantlets ready for sale at the onset of the rains.

Q4: The initial investment needed is quite high. What advice do you have for someone who is limited by capital but would wish to start a business?

A4: There are several ways of mobilizing capital, such as cashing in your own savings; borrowing from relatives, friends or financial institutions; engaging in joint ventures, etc. The subject of mobilizing capital through access to credit will be dealt with in the next session of this module.

Session 4: Accessing credit

Personnel: A facilitator and an assistant (training team), a credit officer from a local finance institution

Supplies: Box of markers, flipchart, masking tape, refreshments

Time: 2 hours

Preparing for the session

Contact a respected finance institution in the local area at least a month before the training, to request the help of a credit officer who will help present the session. Meet with the credit officer at least 2 weeks ahead of the training to brief them about the session and what is expected from them. The credit officer should be prepared to answer the following questions:

- What is a loan?
- What are the different types of loans?
- What are the procedures for taking out a loan?
- What are the terms and conditions for loans?
- What is the required information when applying for a loan?

Write the topic of the day (Accessing credit) and the questions on separate pages of the flipchart ahead of the training.

Conducting the session

1. Have a volunteer participant briefly recap the content of the previous session.
2. Open the day's session by displaying the flipchart with the title of the day's session.
3. Display the questions on the flipchart one by one, and ask the credit officer to take over the training and discuss the questions and provide the information. Encourage participants to ask any questions to help clarify their understanding.
4. Wrap up the training session as follows:
    - Briefly recap the day's session
    - Communicate the topic of the next module (Practical management of a banana tissue culture nursery), and the date, time, date and venue for the first session.

Content

Definition of a loan

A loan is an amount of money, either in cash or in kind, that is borrowed with a view to paying it back at a later date with or without interest.

Types of loans

Different finance institutions have different loan products, and the terms and conditions attached to each loan will vary. Below are some of the loan products for Centenary Rural Development Bank, a finance institution in Uganda that is popular with agricultural entrepreneurs.

- Micro-business loan: A short-term business loan targeting micro-business enterprises, for financing any productive purpose.
- Agricultural loan: A loans designed to finance business activities in agricultural production, animal production (diary, poultry and piggery projects), fishing and fish farming, beekeeping, as well as food processing, i.e. grain mills, oil mills and hullers. The loan period and repayment plan is dependent on the nature and season of the agricultural activity to be financed. Nursery owners are most likely to be eligible for this type of loan.
- Animal traction loan: A loan for financing purchase of draught animals (oxen) and traction equipment (plough, yoke and chains). The security for the loan is the oxen and implements purchased, additional collateral of land, farm machinery and equipment, and any other valuable household items.
- Commercial/SME loan: A loan available to small and medium enterprises (SMEs) engaged in profitable business activities in a variety of sectors including trade and commerce, transport, manufacturing and processing, fishing, building and construction, health, tourism and recreation. The loan can be used to finance working capital, acquisition of business assets and infrastructural development.

Agricultural loans: an example from a local finance institution in Uganda

The main features of the agricultural business loan are:

- The loan period for working capital purpose is up to a maximum 12 months, but development/ investment may exceed 12 months
- No principal loan repayments during the grace period except for the interest
- Repayable through equal instalments with actual amounts based on the projected cash flow of the agricultural activity
- Interest charged on the reducing balance
- Minimum loan amount 100,000 Ugandan shillings (Ugsh; 1 US$ = 1,900 Ugsh on 1/1/10)
- Maximum loan amount 15 million Ugsh.

The basic requirements to access agricultural loans are:

- Savings or current account with the bank
- Project undertaken must be an activity in the agricultural value chain
- Business project must be profitable
- Applicant must be resident within the branch designated area of operation

- Applicant must be owner or tenant of the land on which he or she operates
- Securities include land titles, unregistered land or moveable assets like cows, goats, sheep, household property or business equipment and tools
- Application fee of 5,000 Ugsh
- Commitment fee of 2%
- Completed agricultural loan application form.

Questions and answers (between credit officer and participants)

Q1: How do you decide whether to lend to a business?

A1: We take time to understand where your business is going. We focus more on the present and future than on the past. We look for creative ways to lessen risk factors. One way we do this is by linking the business owner with a business performance coach.

Q2: I am looking to start a new business and am looking for a loan. Can you help?

A2: We only lend to companies that have been in business for a year. This is because new businesses usually need more intensive support than we can provide. The exception is if the business has collateral that is sufficient to cover all debts.

Q3: How long does the loan decision process typically take?

A3: We try to give decisions within 2 weeks of receiving an application. The process takes longer if application forms are not completed properly, with full details and information requested.

Q4: How do you secure your loans?

A4: We secure our loans with collateral that includes a personal guarantee, land titles and other assets. However, a loan will not be denied solely for lack of collateral. A business owner, who cannot present collateral, or an alternate way to repay the loan if the business fails, represents a higher risk. Under such circumstances, the institution will not offer the loan.

Q5: Can you help me restructure my long-term debt?

A5: If your reason for restructuring is more than just wanting to lower the interest rate, we might be able to help. For example, if refinancing would free cash flow to promote growth or add employees, we would consider a loan.

References (module 2)

Agroplan. 2008. *Training Module 1. Farm Business Planning*. http://www.agroplan.org/material /EN/TM_EN/Module_1.pdf (last accessed: Dec 2012).

David S and Oliver B. 2002. *Business Skill for Small-Scale Seed Producers: a Trainer's Guide. Handbook Three. Handbooks for Small-Scale Producers*. Centro Internacional de Agricultura Tropical (CIAT), Kampala, Uganda.

Food and Agriculture Organization (FAO). 2004. *Helping Small Farmers Think About Better Growing and Marketing: A Reference Manual*. *Pacific Farm Management and Marketing Series No 3*. Food and Agriculture Organization (FAO), Apia, Samoa.

Havea L and Flemming E. 2003. *The Farm Management Training Guide*. Food and Agriculture Organization (FAO), Rome, Italy.

Rim JY and Rouse J. 2002. *The Group Savings Resource Book. A Practical Guide to Help Groups Mobilize and Manage Their Savings*. Food and Agriculture Organization (FAO), Rome, Italy.

Robbins P, Bikande F, Ferris S, Kleih U, Okoboi G and Wandschneider T. 2004. *A Guide to Collective Marketing for Smallholder Farmers. Manual 4: The Territorial Approach to Rural Agro-enterprise Development*. Centro Internacional de Agricultura Tropical (CIAT), Cali, Colombia.

Wandschneider T and Yen NK. 2008. *Guide to Agricultural Marketing Extension with Special Reference to Vietnam. Module 2*. Centro Internacional de Agricultura Tropical (CIAT), Cali, Colombia.

Appendix 1: Template for a sales receipt

..... [NAME OF THE COMPANY]

..... [COMPANY ADDRESS]

..... [CONTACT DETAILS]

Sales receipt

Date.....

Quantity	Description	Price	Amount
TOTAL			

Sold by..... Signature .....

Received by ..... Signature .....

Appendix 2: An example of a completed sales receipt

ALINYIKIRA FARMER'S GROUP TISSUE CULTURE BANANA ENTERPRISE

P.O.Box 112, Mukono

0712-345-145

SALES RECIEPT

Number ...06...

Date.....21st/MAY/2011.....

Quantity	Description	Price	Amount
150	Mpologoma Tissue Culture plantlets	2500	375,000
TOTAL			

Sold by .....Sserunkuma Masret..... signature .....S.M.....

Received by .....Kalule Moses..... Signature .....Kalule Moses.....

Appendix 3: Template for a delivery note

..... [NAME OF THE COMPANY]

..... [COMPANY ADDRESS]

..... [CONTACT DETAILS]

Delivery note

Issued by .....[name of person carrying out the transaction]

Please receive the following goods in good order and condition.

Item	Quantity	Unit cost	Total
Total			

Delivered by .....Signature .....

Received the above goods in good order and condition

Received by .....[name of person/company]

Signature .....

Date.....

Return policy

Items must be returned to the seller within 3 days of receipt. Buyer must pay for transport incurred while returning the items. Returned items must be in condition similar to when they were received.

Appendix 4: An example of a completed delivery note

ALINYIKIRA FARMER'S GROUP TISSUE CULTURE BANANA ENTERPRISE

P.O.Box 112, Mukono

0712-345-145

DELIVERY NOTE

Number ....06....

Issued by....Sserunkuma Masek....

Please receive the following goods in good order and condition.

Item	Quantity	Unit cost	Total
150 Tissue Culture Banana Plantlets of Mpologoma variety	150	2500	375,000 ₣
Total			375,000 ₣

Delivered by ....Matovu Sula.... Signature ....

Received the above goods in good order and condition

Received by....Kalule Moses.... Signature....Kalule Moses....

Designation.... Date....21st/05/2011....

Return policy

Items must be returned to the seller within 3 days of receipt. Buyer must pay for transport incurred while returning the items. Returned items must be in condition similar to when they were received.

Appendix 5: Template for an invoice

..... [NAME OF THE COMPANY]

..... [COMPANY ADDRESS]

..... [CONTACT DETAILS]

Invoice

Sold to: .....

Address: .....

Commodity description	Unit price (Ugsh)	Total amount (Ugsh)

Terms of payment

1. Payment on delivery .....

2. Payment before delivery.....

3. Payment ..... day (s) after delivery .....

4. Payment ..... week (s) after delivery .....

5. Payment ..... months (s) after delivery.....

Mode of Payment

Cash.....

Cheque .....

Name ..... Signature .....Date.....

Appendix 6: An example of a completed invoice

ALINYIKIRA FARMER'S GROUP TISSUE CULTURE BANANA ENTERPRISE

P.O.Box 112, Mukono

0712-345-145

INVOICE

Number ..06..

SOLD TO: ....Kalule Moses....

ADDRESS: ....Kafosi - NSanja zone....

Commodity description	Unit price (shs)	Total amount (shs)
150 Plantlets of ban ana Tissue Culture	2500	375,000 ₣
(MPDlogoma variety)		

Terms of payment

1 .Payment on delivery.....Paid Cash upon delivery.....

2. Payment before delivery.....

3. Payment ..... day (s) after delivery .....

4. Payment ..... week (s) after delivery .....

5. Payment ..... Months (s) after delivery .....

Mode of Payment:

Cash.....✓.....

Cheque.....

Name SSerunkuma M..... Signature .....S.M..... Date ..21st/05/2011

Appendix 7: An example of a business contract

Contract for purchase of banana tissue culture plantlets on credit

Buyer's Name ..... Seller's Name .....

Address ..... Address .....

Phone ..... Phone .....

..... [Seller's name] agrees to enter into this contract with

..... [Buyer's name] on ..... [today's date]

The Buyer hereby agrees to pay the Seller ..... shillings on ..... [agreed payment date], being payment for ..... amount of plantlets sold to the Buyer on credit.

If the Buyer fails to make the payment on or before the due date, a late fee of .... shillings shall be added to the balance due and shall be payable immediately.

Both parties hereby agree that this is an 'as-is' sale, with no warranties of any kind expressed or implied. This agreement shall be governed by the laws and regulations of the republic of Uganda.

Signed:

Seller: ..... [Name]..... [Signature]

Buyer: ..... [Name]..... [Signature]

Appendix 8: Template for costing the construction of a humidity chamber

Size of the humidity chamber: Length .....meters; Width ..... meters; Height ..... meters

Stocking capacity:..... plantlets

Item	**Quantity**	**Unit cost**	**Transport and/or related labour cost**	**Estimated total cost**
Polythene sheeting				
Timber for the frame				
Timber for holding polythene				
Eucalyptus				
Bamboo				
Other wood				
Nails				
Water				
Labour for construction				
Grand total				

Appendix 9: Template for costing the construction of a shadehouse

Size of the shadehouse: Length .....meters; Width ..... meters; Height ..... meters

Stocking capacity:..... plantlets

Item	Quantity	Unit cost	Transport and/or related labour cost	Estimated total cost
Materials				
Bricks				
Cement				
Sand				
Metallic pipes (small for roof)				
Metallic pipes (big to support roof)				
Wooden poles (small for roof)				
Wooden poles (big to support roof)				
Aggregate / gravel stones				
Shadenet				
Nails				
Door and padlock				
Rope				
Water				
Subtotal materials				
Labour				
Causal construction labour				
Skilled construction labour				
Subtotal labour				
Total				

Appendix 10: Template for costing tools needed for a banana tissue culture nursery

Item	**Unit of measure**	**Quantity**	**Unit cost**	**Transport and/or related labour cost**	**Total cost**
Wheelbarrow					
Spade					
Knives					
Hoe					
Old oil drum					
Watering cans					
Watering spray for humidity chamber					
Cups for plantlets					
Trays for plantlets					
Protective clothes					
Total					

Appendix 11: Template for computing operational costs for a banana tissue culture nursery business

Item	Unit of measure	Quantity	Unit cost	Related transport costs	Total cost
Materials					
Forest soil					
Sand					
Manure					
Firewood					
Polythene bags					
Plantlets					
Chemical plant protection					
Water					
Stationery					
Subtotal materials					
Labour (1 month)					
Casual labour for potting					
Casual labour for day to day work					
Semi-skilled for supervision					
Subtotal labour					
Other costs					
Trading license					
Repairs					
Maintenance					
Land cost/rent					
Marketing cost					
Credit cost					
Miscellaneous (10% of total)					
Total					

Appendix 12: Template for recording revenue from a tissue culture nursery business

Sales		**Quantity**	**Sales price**	**Total revenue**
Season 1	Sale 1			
	Sale 2			
	Sale 3			
	Sale 4			
Season 2	Sale 1			
	Sale 2			
	Sale 3			
	Sale 4			
Grand total				

Appendix 13: Template for carrying out benefit–cost analysis for a banana tissue culture nursery business

	Amount
Investment costs for construction of a shadehouse	
Investment costs for construction of a humidity chamber	
Tools for operating the business	
Total investment costs	
Depreciated investment costs over ..... years	
Operational costs (annual)	
Benefits (annual revenues from plantlet sales)	
Total net value (benefits – operational costs)	
Profit (total net value – depreciated investment costs)	
Benefits/operational costs	

Module 3
Practical management of a banana tissue culture nursery

Overview

Objective

The objective of this module is to teach participants how to care for banana tissue culture plantlets from the time of receiving them from the producer up to selling them.

Structure

The agronomy module comprises the following sessions:

- Session 1: Building a humidity chamber and a shadehouse
- Session 2: Soil sterilization
- Session 3: Transportation and initial care of tissue culture plantlets
- Session 4: Potting and management of tissue culture plantlets in the humidity chamber
- Session 5: Potting and management of tissue culture plants in the shadehouse

Each session should be held in a single meeting. The five sessions should ideally be conducted over 2 months (2–3 sessions/month).

The sessions should be held at a place where there is space to build a shadehouse (e.g. at a research organization).

Session 1: Building a humidity chamber and a shadehouse

Personnel: One facilitator, one assistant (training team) and, if possible, one person with experience in building structures

Supplies: Humidity chamber construction: polythene sheeting, bricks, timber, nails, hammer

Shadehouse construction: shadenet, nails, sand, gravel, metallic poles, wooden poles, cement, bricks, binding wire, door with padlock, water, hoes, spade

Time: 4 hours

Preparing for the session

Significant preparation is required for this session. The site where the structures are to be built needs to be cleared of weed, plants, etc. and levelled at least a week before the session. All materials for the two constructions need to be purchased and delivered to the venue at least two days before the session. If any materials need to be processed (cut into pieces, or modified in any way), this should also be done before to the session.

Write down all the expenses incurred for the materials for building the humidity chamber and the shadehouse. Also write down where the materials were bought and the contacts of the sellers. Print out copies of these lists – the same number as number of participants (refer to the example in Appendix 1.)

Conducting the session

1. Start by giving a brief overview of the previous module (Business planning and business skills for nursery operators), and explain how the current module builds on that module. In the previous module participants carried out benefit–cost analysis for their prospective nursery business, and in this module they will learn how to manage their prospective nursery business on a day-to-day basis.
2. Introduce the topic of the day. Explain to participants that this is hands-on training and they need to participate fully to acquire the skills that they will need to set up their own structures.
3. Have a person experienced in building nursery structures take the lead in setting up the structures, with the participants helping out. As the structures are being built, encourage participants to ask as many questions relevant to the construction as they want. Also, try to explain the relevance of the different materials being used and explain the alternative materials that could be used.
4. After completing the construction of the humidity chamber and the shadehouse, distribute copies of the costs for the constructions to the participants. Explain that the cost of the structures they will build themselves may be different, depending on the size of the structures, the amount of plantlets they intend to stock, the price of materials, the places where they purchase the materials, etc.
5. Wrap up the session as follows:
    - Briefly recap the day's session

- Communicate the topic of the next session (Soil sterilization), and the date, time and venue where it will take place. The venue should be the same as the current session.
- Encourage participants to draw up their own budgets for constructing humidity chambers and shadehouses based on the amount of money they have available and the size of business they intend to operate.

Content

Humidity chamber

Plantlets are weaned in the humidity chamber, i.e. they are gradually conditioned to an external environment. The humidity chamber provides the 100% humidity which protects the tissue culture plantlets during weaning. Young tissue culture plantlets have poorly developed cuticles, the stomata do not function properly, and the vascular connection between root and shoot may not be complete. Therefore the plantlets need high humidity to survive.

Different types of humidity chambers can be used to wean young tissue culture plantlets. A more sophisticated humidity chamber will last longer but will cost more to construct.

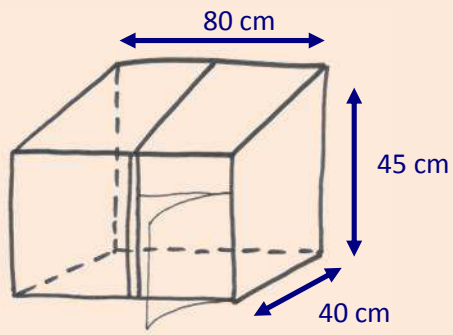

Fig. 1. A sketch of a humidity chamber.

Fig. 2. Humidity chamber constructed for demonstration purposes for participants during training.

Shadehouse

A shadehouse is used to harden plants after they have been weaned. There are different types of shadehouses of varying degrees of sophistication. A more sophisticated shadehouse will last longer but cost more to construct.

- A simple shadehouse can be made from locally available materials, such as bamboo or other wooden sticks, and roofed with mats of leaves or papyrus.
- Stronger, permanent structures can be constructed from metal pipes grounded in concrete slab with chain links and/or shadenet as cover, and stone chippings on the floor.
- Specialized greenhouses or solar domes can be purchased from professional nursery suppliers, but are expensive.

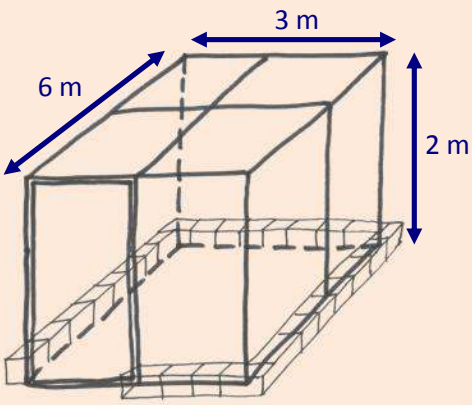

Fig. 3. A sketch of the structure of a shadehouse.

Fig. 4. A shadehouse built as a demonstration for training participants.

Questions and answers

Q1: What will happen if I place the plantlets under the shade of a tree instead of a shadehouse for the hardening process?

A1: A shadehouse gives plantlets the best conditions for their survival, i.e. protection from direct sunlight (which could lead to desiccation), strong winds, etc. If plantlets are placed under a tree instead of in a shadehouse, especially when they are still young (e.g. just after weaning), many are likely to die.

Q2: If I use plastic containers for the humidity chamber, will the plantlets survive?

A2: The plantlets will survive in conditions of high humidity (near 100%) and adequate light. Plastic containers are not recommended if they are not transparent.

Q3: Where can I buy a shadenet?

A3: There are several shops, especially in urban commercial centers, where you can buy shadenets. It is however advisable to buy from a reputable dealer. We have included a few dealers where you can purchase shadenets and many other items that may be used to construct shadehouses and humidity chambers.

Q4: How much will I pay for the labour to construct decent structures?

A4: The price of labour varies according to location, sophistication of the structure, etc. Unless you are planning very sophisticated structures, humidity chambers and shadehouses can be built without skilled labour, so you can build it yourself.

Q5: What is the best timber to use for building a shadehouse?

A5: There is not a single recommended type of timber to use when constructing shadehouses or humidity chamber. You should try to find timber that is durable (such as timber from musizi, eucalyptus or muvule trees). You could ask people who have building experience to advise you.

Session 2: Soil sterilization

Personnel: One facilitator and one assistant (training team)

Supplies: 1 wheelbarrow of sand, 4 wheelbarrows of forest soil, 2 wheelbarrows of organic manure, 2 hoes, 1 spade, 1 old oil drum, 20 sisal bags, firewood, 40 liters of water, box of markers, flipchart and paper, masking tape, refreshments

Time: 1 hour 30 minutes

Preparing for the session

All the supplies must be delivered to the venue at least one day before the session. Clear the area where the session will be conducted days before the session by levelling it and draining it where necessary.

Conducting the session

1. Open the day's training session by asking a volunteer participant to briefly recap the previous training session.
2. Introduce the day's topic, and explain to participants that the day's session is going to be practical and they are encouraged to participate.
3. Explain to participants the importance of sterilizing the soil mixture. This is done to destroy plant pathogens, pests and weeds which may be present in the soil, before planting fragile plantlets that have just left the laboratory.
4. Demonstrate the soil sterilization procedure, with the participants actively helping. First, have the participants make up the soil mix according to the recommended ratio. Then have the participants take part in all the other procedures. When the soil mix is considered sterilized, have the participants remove the materials that were used as cover to allow the soil mixture to cool down.
5. There may not be enough time during the session for the soil mixture to cool down completely. To demonstrate the final cooling stages, very carefully remove one or two sisal bags from the hot oil drum and spread out the contents. Tell participants that the remaining bags will be removed when the oil drum has lost its steam completely and will be spread out to cool.
6. When the heated soil mix that was spread out is completely cooled down (after 30–45 minutes), participants should pack it in new sisal bags and store it in a cool dry place for use in the next session.
7. Wrap up the session as follows:
    - Briefly recap the day's session
    - Communicate the topic of the next session (Transportation and initial care of tissue culture plantlets), and the date, time and venue for the session. The venue should be the same as the current session, which is also the same as Session 1. Tell participants they must arrive on time, as it is important for them to witness the arrival of the plantlets, which will be at the beginning of the session.

Content

Importance of soil sterilization

Sterilized soil is needed for potting after deflasking, and also when repotting for transfer to the shadehouse. Sterilizing destroys plant pathogens, pests and weeds which may be present in the soil, before planting fragile plantlets that have just left the laboratory.

The soil mixture

The best potting medium for tissue culture banana plantlets should have a good balance between its moisture holding and drainage characteristics, so that the roots have sufficient water without becoming waterlogged. It should be a steam-sterilized mixture of forest soil, cattle manure and sand. The ratio could be four parts of forest soil to two parts of cattle manure to one part of sand (4:2:1).

Soil sterilization procedures

There are several procedures that can be used to sterilize soil and make it ready for potting tissue culture plants. Some are very expensive while others are much less expensive. The methods include:

1. Applying a mixture of methyl bromide and chloropicrin. High-value crop production often uses this method to kill soil-borne pests. However it is too expensive for smallholder farmers.
2. Solar sterilization (soil solarization). Soil solarization is the solar heating of moistened soil by covering with an appropriate material, such as transparent polyethylene or polyvinyl chloride foil. The main advantages of this method are that it is simple, inexpensive and non-chemical, which means that the soil biological balance is not severely disturbed. Soil solarization helps with the control of nematodes and fungi, however some nematodes (*Meloidogyne* spp.) are not properly controlled by this method. Effectiveness of the method depends on soil type, moisture and microbial activity in the soil, as well as climate conditions (adequate sunshine).
3. Steam sterilization. This method is the most widely used among smallholder farmers. It is inexpensive – the only costs are labour, fuel and equipment (steamer).

Steam sterilization procedure

Prepare the necessary materials: oil drum, water, fireplace and firewood, forest soil, sand, manure, hoes, spade, wheelbarrow and sisal bags.

1. Ensure the drum has no holes. Weld some strong metal pipes inside the drum, horizontally and approximately 30 cm from the bottom of the drum, to make a shelf for the soil sacks and keep them above the water.
2. Pour water into the drum up to approximately 25 cm from the bottom of the drum. The water should not touch the metal pipes.
3. Thoroughly mix the forest soil, the manure and the sand in the right proportions. Note that different nurseries use different proportions; the most common are: 5:2:1, 2:1:1 or 4:2:1 for forest soil:manure:sand.
4. Pack about 10 kg of the mixture into sisal sacks and place them in the drum so that they sit on the metal pipes. When the drum is full, cover the top of the drum with sisal bags so that steam is retained when the drum is heated.
5. Proper sterilization of the soil depends on the amount of firewood used and the intensity of the fire. Generally, after 1–2 hours of a large enough fire, when steam is seen coming out of the soil, the soil should be fully sterilized.

6. When the soil is considered fully sterilized, remove the covering sisal bags and leave the drum to cool. After cooling, remove the sisal bags containing the soil mixture and pour the soil onto a clean surface, spreading it out to cool. It may take 2–3 hours, or overnight, before the soil cools completely and is ready to use.

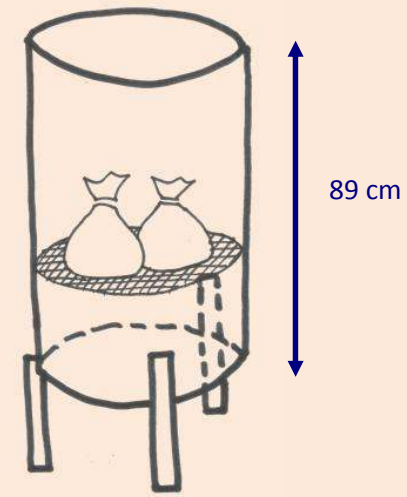

Fig. 5. Sketch of an oil drum used for heating the soil mixture.

Fig. 6. Oil drum used for heating the soil mixture.

Questions and answers

Q1: What should I do if I cannot access forest soil?

A1: The reason for recommending forest soil is that it is rich in nutrients. If not available, any good, dark soil, especially one obtained from a place that has not had crop growth for a reasonable amount of time, may be used.

Q2: Can I heat the soil using electric current?

A2: Any method of heating that moves the steam through the soil without distorting its structure may be used, including electric current. In fact, in modern tissue culture production facilities, electric current is routinely used for soil sterilization.

Q4: Do I also need to sterilize the soil in the field where I am going to plant the tissue culture banana plantlets?

A4: No, you only need to sterilize the soil for plantlets that have just left the laboratory for weaning and hardening. After that, the plantlets have been conditioned enough to grow in the external environment.

Q5: Can I use inorganic fertilizer instead of organic manure when making a soil mixture?

A5: Yes, but you need a lot of inorganic fertilizer, which will make the process very expensive. Organic manure is better because it has a soil binding element that is needed for good plant growth.

Session 3: Transportation and initial care of tissue culture plantlets

Personnel: One facilitator and one assistant (the training team)

Supplies: Tissue culture plantlets at different stages: (1) plantlets in tissue culture flasks ready for the humidity chamber, (2) plantlets leaving the humidity chamber and ready for hardening, (3) plantlets that have been hardened and are ready for field planting; water; potting bags; plastic containers; sterilized soil; refreshments

Time: 2 hours

Preparing for the session

Contact the tissue culture producer at least two weeks before the training session to make an order for plantlets at the three different stages. Either collect the plantlets, or arrange to have the plantlets delivered, from the tissue culture producer on the day of the training. Try and arrange for the participants to arrive in time to see the arrival of the plantlets.

So that participants appreciate the difference between bad and good transportation of tissue culture plantlets, have a few plantlets from each of the three categories deliberately transported badly (i.e. expose them to the sun and don't provide them with water).

Conducting the session

1. Open the day's training session by asking a volunteer participant to briefly recap the previous training session.
2. Introduce the topic of the day.
3. Discuss with participants the various methods of transporting tissue culture plantlets, including both bad and good methods. Discuss the implications of the different transportation methods. Stress the optimal conditions for transporting tissue culture plantlets.
4. Demonstrate the best practices for handling tissue culture plantlets on arrival at the nursery. Explain to the participants the importance of planning ahead of plant arrival.
5. After the demonstration, ensure the plantlets are cared for appropriately: deflask the plantlets in the culture flasks and put them into the humidity chamber; put those that are ready for hardening into the shadehouse; and give those that are ready for planting to the participants.
6. Wrap up the session as follows:
    - Briefly recap the day's session
    - Communicate the topic of the next session (Potting and management of tissue culture plantlets in the humidity chamber), and the date, time and venue for the session. The venue should be where the shadehouse and humidity chamber were constructed in Session 1.

Content

General precautions for transporting tissue culture banana plantlets

Tissue culture plantlets should be handled with great care during transportation from the place of production/purchase to the nursery, as follows:

1. Duration of transport should be as short as possible.
2. Temperature should be between 10ºC and 40ºC.
3. Containers should be protected from rain and direct sunlight, which could damage the fragile leaves of plantlets.
4. Plantlets should always be kept in an upright position.
5. To avoid erroneously mixing cultivars, plantlets should be labelled with the correct cultivar name.

Transport of tissue culture banana plantlets at different stages

Plantlets can be transported in culture flasks, after removal from flasks, or as potted plants. Each requires different care.

- Plantlets in flasks: Care should be taken to ensure that the flasks do not break while in transit, by packing them close to each other within the container. On arriving at the nursery, plantlets in flasks do not need to be removed immediately, but can be left for up to 2 days.
- Deflasked plantlets: These are the most fragile to transport. They should be placed in a plastic container with adequate water, and covered to maintain humidity and protect them from sunshine. On arrival at the nursery, these plantlets must be potted and placed in a humidity chambers immediately.

Fig. 7. Plantlets in flasks.

Fig. 8. Plantlets packed in a plastic container Ready to be transported.

- Potted plantlets: Transporting ready-to-plant plantlets requires a lot of space and hence the transportation costs are high. The plantlets should not be exposed to direct sunlight for prolonged periods of time; either transport them at night or by providing them with adequate shade. Also, take care to protect plantlets from strong winds while driving, especially if placed on the back of a pickup truck.

Upon arrival at the nursery

Plantlets received in flasks or those that are deflasked should be removed from their container and placed in a room with indirect sunlight or fluorescent light. A room temperature of 20–35°C is ideal. Deflasked plants should be potted immediately.

Potted plantlets that are ready to be planted in the field should be put under shade or directly into the shadehouse upon arrival.

Deflasking

Tissue culture plantlets can be deflasked at various sizes, but best results are achieved when plantlets are 7–10 cm tall and have a strong root system. Plants should be deflasked in a sheltered, shaded area.

1. Open the flasks by removing the cap.
2. Dissolve the nutrient medium with water and shake carefully until the plants are freely floating.
3. Carefully remove the plantlets from the flask, using either forceps or fingers, and place them in a basin or bucket of water.
4. Wash off the nutrient medium from the roots.
5. If a cluster of plantlets was produced in a single tissue culture flask, these can be separated into individual plantlets by gently pulling them apart at the base or by cutting through the joint corm tissue using a scalpel.
6. Long roots should be carefully disentangled and trimmed back to about 2–3 cm to ease planting and induce increased rooting.

Questions and answers

Q1: Is it possible to not lose any plants during transit?

A1: Plant loss during transport is mostly due to poor practices. With proper care, all plants should survive.

Q2: Do you pay a transport licence when transporting plantlets?

A2: We have not heard of any nursery operator being asked for a transport licence in Uganda when transporting tissue culture plantlets. The Ministry of Agriculture does however require that anyone transporting planting materials from one district to another has a phyto-sanitary certificate. However, this is not enforced at the moment.

Q3: What is the maximum time plantlets should be in transit?

A3: This is difficult to say, but the transportation should be done as quickly as possible.

Q4: If the leaves of the plantlet burn while in transit, can they still recover when planted?

A4: Yes. The plantlet can still grow new leaves, provided the shoot is not broken.

Session 4: Potting and management of tissue culture plantlets in the humidity chamber

Personnel: One facilitator and one assistant (training team)

Supplies: Tissue culture plantlets in flasks, water, potting bags, plastic containers, sterilized soil, refreshments

Time: 2 hours

Preparing for the session

Order new flasked tissue culture plantlets from a tissue culture producer at least 2 weeks before the session. Have the plantlets delivered on the day of the training if possible. All other materials required for the training should be delivered at least a day before the session.

Conducting the session

1. Open the day's training session by asking a volunteer participant to briefly recap the previous training session.
2. Introduce the topic of the day. Explain to the participants that the session is a practical, hands-on training. For all procedures, first carry out the procedure while the participants observe, and then have each of the participants replicate the process on his or her own. Each participant will monitor their own plantlets throughout Sessions 4 and 5, and plantlets should be labelled accordingly with the participant's name.
3. The following procedures should be demonstrated and then repeated by the participants:
    - How to remove plantlets from the flask (repeat from previous session)
    - How to pot plantlets after removal from the flask.
4. Have participants place their potted plantlets in the humidity chamber. Explain to participants the importance of the humidity chamber, and the optimum conditions for the plantlets within the humidity chamber.
4. Wrap up the session as follows:
    - Briefly recap the day's session
    - Communicate the topic of the next session (Potting and management of tissue culture plantlets in the shadehouse), and the date and time for the session. The date should be 3 weeks after the current session, when the plantlets will be ready for transfer to the shadehouse. The venue should be the same as the current session.
    - Arrange care for the plantlets until the next session. Participants can carry out care of their own plantlets, or a volunteer can look after all the plantlets.

Fig. 9. Sorting plantlets that have been removed from the culture bottles before weaning.

Content

Potting plantlets for the humidity chamber

1. Deflask plantlets as explained during the previous session.
2. If a cluster of plantlets was produced in a single tissue culture flask, these can be separated into individual plantlets by gently pulling them apart at the base or by cutting through the joint corm tissue using a scalpel.
3. Plantlets that are not of uniform size (which occurs often when several plantlets are grown in a single jar) are sorted according to size.
4. Plantlets of similar size are potted into the same plastic container containing a sterilized soil mixture. Up to five plantlets of the same size can be transferred into one plastic container.

Importance of the humidity chamber

The humidity chamber helps the plantlets adapt to the external environment. While in the culture bottles, plantlets are under 100% relative humidity and lower light intensities. In the humidity chamber, they experience lower humidity and higher light levels, getting them used to conditions in the field.

Fig. 10. Plantlets undergoing weaning in the humidity chamber.

Management of plantlets in the humidity chamber

- Temperature should be between 25°C and 35°C. Lower or higher temperatures can lead to poor plant development.
- Keep plantlets shaded. Shades can be constructed using sheeted bamboo poles, grass or leaves and placed on the roof of the humidity chamber. The chamber itself can be kept in a shadehouse or under natural shade (e.g. a tree).
- High relative humidity should be maintained by regular misting using a hand sprayer. The relative humidity should be near 100% during the first week in the humidity chamber, and remain above 90% during the entire time in the humidity chamber. Humidity can be assessed with hydrometers; if these are not available, humidity can be assessed visually: when droplets form on the walls of the humidity chamber, humidity is near 100%. Humidity chambers should be opened as little as possible to prevent water from escaping.

Assessing readiness of plantlets for hardening

New roots appear about 4–5 days after plantlets have been placed in the humidity chamber. Fast rooting indicates good acclimatization, while lack of rooting might indicate an unsuitable potting mix, lack of aeration or inadequate water supply. Plantlets are ready to leave the humidity chamber when they have a well-branched root system, fully developed leaves and a pseudostem diameter about one-tenth of its height. Roughly speaking, larger plants will be ready for transfer to the shadehouse after 1–2 weeks while smaller ones will take longer (3 weeks).

Questions and answers

Q1: Will pests or pathogens attack plantlets while they are in the humidity chamber?

A1: It is unusual to find pests or pathogens attacking plantlets while they are still in the humidity chamber. If this does happen, first isolate the affected plantlets and consult a specialist to control the pest or disease.

Q2: If the plantlets fail to reach the expected size within 4 weeks, should I discard them?

A2: Normally plantlets spend a maximum of 4 weeks in the humidity chamber. If plantlets still look too weak to remove from the chamber after 4 weeks, there is a problem with conditions inside the chamber. Fix the problem and keep them there a while longer, or discard them.

Q3: Can plantlets survive in the humidity chamber without high humidity?

A3: No. Plantlets need high humidity, especially during the first weeks.

Q4: Can the humidity chamber be placed in a location other than a shadehouse?

A4: Yes, as long the conditions for optimal plant growth are maintained (humidity, shade and temperature).

Session 5: Potting and management of tissue culture plantlets in the shadehouse

Personnel: One facilitator and one assistant (training team)

Supplies: Tissue culture plantlets that have been weaned (i.e. have been in the humidity chamber for at least 2 -3 weeks), sterilized soil, potting bags, water, markers, refreshments

Time: 2 hours

Preparing for the session

Ensure that the plantlets which participants used in the previous session are ready to be transplanted into the shadehouse before organizing this session. If many of the plantlets have died, or are not yet ready to leave the humidity chamber, order more plantlets that are ready for hardening from a tissue culture producer and have them delivered on the day of the training if possible. Ensure that all other materials required for the training are at the training site a day ahead of the training.

Conducting the session

1. Open the day's training session by asking a volunteer participant to briefly recap the previous training session.
2. Introduce the topic of the day. Explain to the participants that the session is a practical, hands-on training.
3. Demonstrate how to put sterilized soil into polythene potting bags, and then how to plant plantlets in the potting bags. Then have each of the participants repeat the process using his or her own plantlets. Each participant should pot at least four plantlets.

Fig. 11. Participants pouring water into potting bags.

4. Ask participants to label their plants by writing their names and the date they performed the task on the container or plastic sheeting holding the potted plant, then transfer their potted plants to the shadehouse.
5. Explain how to manage the plantlets within the shadehouse. So that participants appreciate the importance of maintaining good conditions within the shadehouse, place a few of the potted plantlets (~5) outside the shadehouse and subject them to natural conditions without management (e.g. without watering).
6. Wrap up the session as follows:
   - Briefly recap the day's session
   - Encourage participate to visit the shadehouse regularly to check on the progress of their plantlets
   - Communicate the topic of the next training session (the first session of a new module, Marketing for nursery operators), and the date, time and venue.

Content

Removal of plantlets from the humidity chamber and potting them for the shadehouse

Plantlets are transplanted into containers or black polythene bags after 1–2 weeks growth in a humidity chamber as follows:

1. Fill the polythene bags (~ 250–350 ml) or containers with sterilized soil mixture and pour some water into the polythene bags.
2. Carefully uproot the plantlets from their container, one at a time.
3. Using your index finger or a rod, make an insertion into the moist soil within the polythene bag and carefully insert the uprooted plantlet in an upright position. Plant only one plantlet per bag or container. Cover its entire corm with the potting mix.
4. Arrange polythene bags in double rows in the shadehouse, which saves space while allowing for proper leaf development on the side of the open alleys between rows. Label the bags with cultivar name and the date of transplantation.
5. Keep plants in the shadehouse in the nursery for a period of 2–4 months, before moving them to the field.

Management of plantlets in the shadehouse

- Daily watering, either in the morning or in the evening; twice a day (morning and evening) during very dry conditions.
- Temperature between 15°C and 35°C, with an optimum of 25–30°C.
- A high standard of hygiene is necessary to reduce the risk of damage by pest or pathogens. Caterpillars and mites can be serious leaf pests in the nursery. Spraying plants with insecticides can be effective for the control of such pests.
- Partial shading is essential especially during the early stages in the shadehouse. Shade can be provided by using a special shadenet to cover the shadehouse.

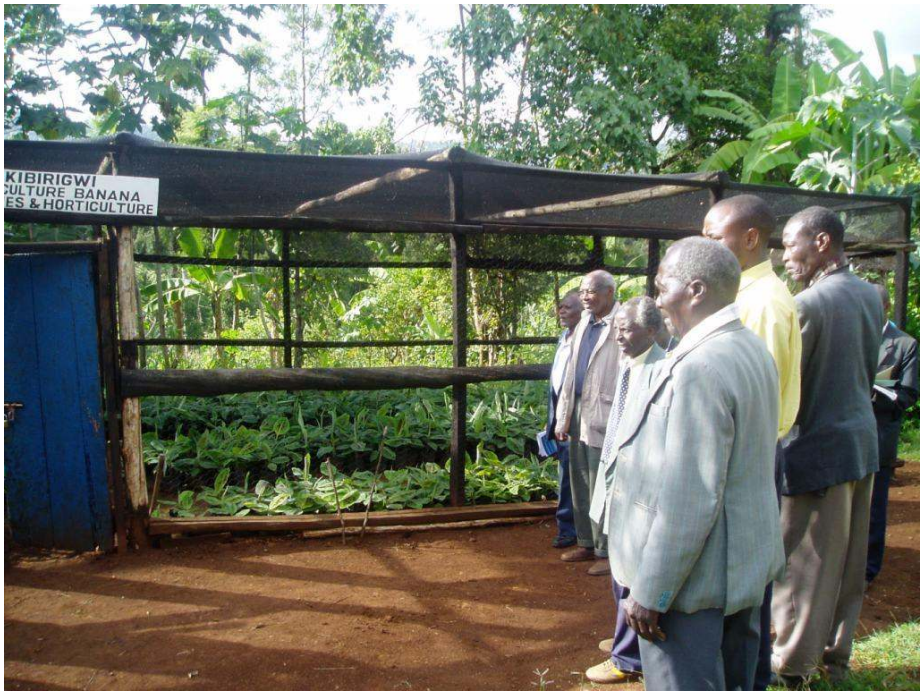

Fig. 12. Plantlets growing in a farmer-managed shadehouse.

Questions and answers

Q1: Can plantlets be hardened under a structure without a shadenet?

A1: Yes. The key to successful hardening of tissue culture plantlets is the conditions, not the actual materials used. As long as you have something in place to provide shade and protection from pests, plantlets will grow well.

Q2: What should I use to protect plantlets from pests like caterpillars?

A2: If you see caterpillars on the leaves, you can use pesticides such as cypermethrin (e.g. Duducyper) applied according to the manufacturer's recommended dosage.

Q3: Can I put liquid manure on plantlets during hardening?

A3: Plantlets are planted in a soil mixture containing cattle manure, and this should be sufficient, so it is not necessary to add liquid manure. However, if you see symptoms of nutrient deficiency in the plantlets during the hardening process, you may add liquid manure.

Q4: How long can I keep plantlets in the shadehouse; can I keep them longer if there are no buyers?

A4: If plantlets spend more than 3 months in the shadehouse, they will probably be taller than normal plantlets. To keep them looking suitable for purchase cut their stem in the middle to encourage regrowth.

References (module 3)

Israeli Y, Lahav E and Reuveni O. 1995. In vitro culture of bananas. In: Gowen S (ed), *Bananas and Plantains*. Chapman and Hall, London, UK, pp 147-178.

Thaker MN and Jasrai YT. 2002. Increased growth of micro-propagated banana (*Musa paradisiaca*) with VAM symbiont. Plant Tissue Culture 12:147-154.

Vuylsteke DR. 1999. *Post-Flask Management of Micro-Propagated Bananas and Plantains*. International Institute of Tropical Agriculture (IITA), Ibadan, Nigeria.

Appendix 1: An example budget for setting up a shadehouse, humidity chamber and soil sterilization unit

	Item	Units	Quantity	Unit cost[a]	Total cost[a]
Shadehouse (L x W x H = 6 x 3 x 2 m), capacity 6,000 plantlets					
1	Shadenet (10 x 10m)	meters	70	6,500	455,000
2	Sewing of shadenets	lump sum	1	30,000	30,000
3	Metallic pipes	number	10	20,000	200,000
4	Metallic plates (for holding pipes	number	8	2,500	20,000
5	Binding wire	rolls	1	80,000	80,000
6	Holding rod	packets	1	16,000	16,000
7	Black paint (to prevent pipes from rusting)	liters	0.5	20,000	10,000
8	Door pipes	number	2	20,000	40,000
9	Patter	pairs	1	5,000	5,000
10	Stipule	pairs	1	2,000	2,000
11	Padlock	number	1	5,000	5,000
12	Door angle	number	1	25,000	25,000
13	Cement	bags	1	25,000	25,000
14	Bricks	number	120	100	12,000
15	Sand	wheelbarrows	5	3,000	15,000
16	Labour	lump sum	1	250,000	250,000
	Total				1,190,000
Humidity chamber (2 x 1 x 1 m), capacity 500 plantlets					
1	Nails	kg	2	3500	7,000
2	Timber for the flame	number	4	5500	22,000
3	Holding timber	number	1	4000	4,000
4	Polythene sheeting	meters	5.5	3800	20,900
5	Labour	lump sum	1	25000	25,000
	Total				78,900
Soil sterilization unit					
1	Empty drum with welded metal grating				100,000
Grand total					**1,368,900**

[a]Costs in Ugandan shillings (1 US$ = 1,900 Ugsh on 1/1/10).

Module 4
Marketing for nursery operators

Overview

Objectives

The main objectives of this module are to help prospective nursery operators to identify potential markets for tissue culture banana plantlets, and to equip them with relevant marketing information.

Structure

This module is comprised of the following sessions:

- Session 1: Introduction to marketing
- Session 2: Linking prospective nursery operators to tissue culture producers
- Session 3: Linking prospective nursery operators to tissue culture plant buyers

The three sessions should be conducted in three separate training days over the course of about one month.

Session 1: Introduction to marketing

Personnel: A facilitator and an assistant (training team)

Supplies: Box of markers, flipchart, masking tape, refreshments

Time: 2 hours 30 minutes

Preparing for the session

Write the title of the module (Marketing for nursery operators), the topic of the day (Introduction to marketing) and the questions that will guide the day's training on the flipchart ahead of the training. The questions are:

- What is a market? What are the examples of markets?
- What is demand? What factors can affect demand of a product?
- What is supply? What factors can affect supply of a product?
- What influences the price of a product?

Conducting the session

1. Open the day's session by displaying the flipchart with the title of the module, and the title of the session.
2. Display the questions guiding the day's session one by one, and have participants brainstorm on each of them. Write down the responses on the flipchart. Encourage participants to provide examples where appropriate. Where necessary, supplement the discussion.
3. Wrap up the training session as follows:
    - Briefly recap the day's session
    - Communicate the topic of the next session (Group marketing), and the date, time and venue for the session.

Content

Markets

A market is a platform that brings together buyers and sellers to exchange goods and services. Marketing consists of all activities involved in moving a product from the point of production to the point of consumption. In other words, marketing involves all those activities linking producers and consumers. Successful marketing ensures that products are available:

- In the right place
- In the form wanted
- In the quantities and quality required
- At the time needed
- At the right price.

Markets can be classified by:

- Commodities, e.g. banana market, orange market
- Time, e.g. Sunday market, evening or morning market
- Location, e.g. Owino market, Kabalagala market.

What is demand?

Demand can be defined as the amount of a particular product or service which buyers are willing and able to buy. Demand is not static but constantly changing. Some of the factors affecting demand are:

- Prices. If prices rise, demand usually falls; if prices fall, demand usually increases.
- Income. When consumers' income increases, so does their purchasing power and their demand for various products; when incomes are low, the opposite happens.
- Quality. Buyers are sensitive to the quality of agricultural products. Improvements in quality can lead to an increase in demand, whereas a decline in quality can have the opposite effect.

What is supply?

Supply can be defined as the amount of a product which producers and market intermediaries are able to provide. Some of the factors influencing the supply of agricultural products are:

- Climate. Favourable weather conditions will mean a good harvest and increased supply, while drought or floods will have the opposite effect.
- Pests and diseases can have a negative impact on production and supply.
- Production costs. An increase in the production cost of a certain commodity may lead farmers to shift to other commodities with better returns. A decline in production costs might have the opposite effect.
- Prices. If possible, farmers will increase supply when prices rise, and reduce it when prices fall. In the case of storable crops, such as grains, farmers may be able to respond rapidly to price increases by releasing stocks.
- Transport infrastructure. An improvement in transport infrastructure can allow farmers to reach urban markets more easily and increase supply.

What influences the price of a product?

Prices are largely determined by supply and demand. Prices can fluctuate significantly, even during a single day. If large quantities of a certain product, such as banana, suddenly arrive on the market, for example during the harvesting period, prices will fall. When there is a shortage of supplies in the market, for example because of a failed crop, prices will rise. During festive periods like Christmas, demand for banana expands, leading to an increase in the price. Knowing what is happening with demand and supply is essential to understand not only short-term and seasonal price variations but also longer term price trends. Knowledge of supply and demand may even enable farmers to anticipate future price changes.

Questions and answers

Q1: If I overestimate the demand for tissue culture plantlets, what do I do with the plantlets left over at the end of the season?

A1: Any plantlets not sold have to be kept in good condition until the next season comes around, and this incurs additional costs. Therefore it is best to estimate as accurately as possible the demand each season.

Q2: If 40% of my tissue culture plantlets are destroyed by the sun while I am transporting them from the tissue culture producer, am I justified to transfer the cost to my buyers?

A2: If you transfer these costs to your buyers, they may not be able to afford the plants, or they may decide to buy from other nurseries. So you are advised not to try and pass on these costs. On the other hand, if the tissue culture producer is the one charged with the responsibility of transporting the plantlets, she or he will have to bear the cost of replacing the plantlets.

Q3: If I ask different prices from different clients (discriminatory pricing) when selling plantlets, would that be good for my business?

A3: Price discrimination has some advantages (you can get higher prices from some wealthier buyers, and other consumers can enjoy lower prices), but it can also cause problems. Discriminatory pricing may be seen as unfair. It may also incur higher administration costs, because markets need to be separated. We recommend to very carefully weigh the pros and cons of price discrimination before applying it in the business. However, price discrimination can be based on selling different grades of quality for different prices. You can certainly ask a premium price for a premium product.

Session 2: Linking prospective nursery operators to tissue culture producers

Personnel: A facilitator and an assistant (training team), representatives from different banana tissue culture producers

Supplies: Box of markers, flipchart, masking tape, refreshments

Time: 4 hours

Preparing for the session

At least a month before the session, contact and invite to the session all banana tissue culture producers in the region who could do business with the nursery operators. Inform the producers of the opportunity to meet with prospective buyers of large quantities of banana tissue plantlets who have been equipped with the skills to operate a banana tissue culture nursery. Meet with the tissue culture producers who have agreed to attend at least 2 weeks before the session, and provide them with the themes that will guide their discussion during the session. The themes should include:

- The location of the tissue culture producer
- Cultivars produced
- Quality of plantlets produced
- Terms of doing business (price of plantlets at various stages of growth, payment terms, discounts, credit sales, etc.)
- After-sales service (transport facilities, training, providing linkages to buyers).

Advise them to bring along any useful documentation about their business that can be given to the participants, such as business cards, brochures, etc.

If more than one tissue culture producer agrees to attend, try to schedule the meetings with the participants on different days.

Conducting the session

1. Have a volunteer participant briefly recap the content of the previous session.
2. Invite the representatives to address the participants about their tissue culture business. They should provide information to the participants based on the themes given. Encourage participants to ask any questions to help clarify their understanding.
3. Wrap up the session as follows:
    - Briefly recap the day's session
    - Communicate the topic of the next session (Linking prospective nursery operators to tissue culture buyers) and the date, time and venue for the session (the venue should be the same as the current session).

Questions and answers (between representatives and participants)

Q1: If I fail to sell all the plantlets I have bought in a given season, can the tissue culture producer help?

A1: Unfortunately, when a client buys our plantlets, we can only support them in terms of providing information on post-flask management. We encourage our clients to do a good market survey so that they are able to accurately estimate the demand before placing an order for the plantlets.

Q2: If the farming community has a desired cultivar that is not being produced under tissue culture technology, can you take it up and start producing it through tissue culture?

A2: Yes, it very possible to take up a desired cultivar and multiply it. However we have to do our own analysis of the market demand before we can undertake the exercise.

Q3: What is the minimum quantity of plantlets sold at the tissue culture production facility?

A3: The tissue culture production facility sells plantlets to all clients, from those taking just one plantlet to those who buy thousands of plantlets.

Q4: Do you offer discounts?

A4: We do offer discounts for clients buying over 1,000 plantlets, i.e. for every 1,000 plantlets purchased, we give 20 free plantlets.

Q5: Do you provide training to people who wish to open a tissue culture banana nursery?

A5: We have partners like IITA and VEDCO who train people in post-flask management of tissue culture plantlets, and we usually refer prospective nursery operators to them.

Session 3: Linking prospective nursery operators to tissue culture plant buyers

Personnel: A facilitator and an assistant (training team), representatives of buyers of tissue culture plantlets (NGOs, local government bodies, private buyers, etc.)

Supplies: Box of markers, flipchart, masking tape, refreshments

Time: 2 hours

Preparing for the session

At least a month before the session, contact and invite to the session a range of potential buyers of banana tissue culture plantlets in the region who could do business with the nursery operators.

Inform the nursery operators or prospective nursery operators (the participants) of the opportunity to meet with prospective buyers for their plantlets, and that they must prepare well for this session. They should prepare a short presentation about their business that includes the following:

- Location of the nursery
- Cultivars produced
- Quality of plantlets produced
- Terms of doing business (price of plantlets at various stages of growth, payment terms, discounts, credit sales, etc.)
- After-sales service (transport facilities, training, providing linkages to buyers)

They could also produce business cards and brochures providing this information, which they could give to the potential buyers.

Remind both the invited buyers and the nursery operators about the meeting a week before the date of the meeting.

Immediately before the session starts, have a brief meeting with the participants and remind them of the important information they need to share with the buyers.

Conducting the session

1. Have a volunteer participant briefly recap the previous session.
2. Have all participants introduce themselves briefly, i.e. their name, the organization they work for, the nature of the business and the reason for attending the day's session.
3. Ask the nursery operators to each give a short presentation about their business. Encourage the invited buyers to ask any questions to help clarify their understanding.
4. Ask each buyer to brief the nursery operators about the way they buy plantlets: their buying conditions, payment regimes, potential amounts demanded, cultivars needed, prices offered, documentation needed (where applicable) or generally how they would want to partner with the nursery operators. Encourage the nursery operators to ask any questions to help clarify their understanding.
5. Wrap up by briefly by recapping the day's session.

Content

An example of information presented by one of the nursery operators during the training linking nursery operators and potential buyers:

Hajji Kintu's Tissue Culture Banana Nursery Business

Location	Nambi, Zirobwe, 12 Km from Wobulenzi Town
Cultivars	Mpologoma, Kisansa, Kibuzi
Mobile	0712-xxx-xxx
Email	xxxxx@yahoo.com
Year started	2009
Price	Negotiable

Discounts:

1. Free transport for clients buying over 1,000 plantlets and who are within 5 km of the nursery
2. 10 free plantlets with every 500 plantlets bought
3. Credit sales for regular customers – subject to negotiation
4. Price reduction of 5% for all plantlets bought in excess of 1,000 plantlets.

Examples of procurement procedures of potential buyers of tissue culture plantlets

Plan International – An NGO

1. They run an advertisement in the newspaper attracting potential suppliers of the agricultural produce.
2. People/institutions willing to supply the agricultural produce submit their interest clearly quoting their price, cultivars/produce, any possible discounts and why they think they are better suited to supply the required agricultural materials.
3. Letters of interested are reviewed and all applicants notified of the outcome. Successful applicants are called to the offices of Plan International to sign bidding documents and are hence awarded contracts with terms and conditions of doing business. Normally a commitment fee of up to 40% is issued to the supplier upon signing the relevant documentation.

National Agricultural Advisory services (NAADs) – A local purchasing body for the local government in Uganda

1. They put out an advertisement (newspaper, public notice boards within villages, community radios, local meetings, personal contacts) for at least a month.

2. People apply in writing (letter detailing terms of business transactions (price, capacity, cultivars), after sales services (training, transportation), etc.).
3. A sub-county procurement committee sits to choose the best supplier.
4. Successful candidate(s) are given a local purchase order detailing dates to supply, quantities to be supplied, cultivars to supply, prices, payment and delivery terms, etc.
5. Supplier provides the plantlets.
6. Processing of payments commences.

Questions and answers

Questions from potential buyers

Q1: How can I ensure the nursery operator sells me the right cultivar, since the plantlets are sold at a stage when it is virtually impossible to distinguish between cultivars?

A1: It is true that you cannot distinguish the cultivars at the time they are sold to the customer. Therefore you should always buy from people you know and trust, and if it turns out you have been sold the wrong cultivar, you can go back to them and sort out the problem.

Q2: What happens if you fail to provide the desired quantities or quality of plantlets?

A2: As nursery operators, we strive to satisfy our clientele by providing them with what they demand in terms of quality and quantity. When we can't do this, we always communicate with our clients to inform them of the situation.

Q3: What happens if you fail to sell all your plantlets in a season?

A3: Normally, we plan for the market and we stock plantlets based on our analysis of the demand. However, when plantlets are not sold at the end of the season, we will maintain them in good condition for sale in the following season.

Q4: Do you give sales discounts and after-sales services like transport?

A4: Each nursery operator has their own terms of business, but most will give a slight price cut for clients who buy large quantities of plantlets, or give some free plants.

Questions from tissue culture nursery operators

Q5: What are the possible penalties for delaying the delivery of planting materials?

A5: Each buyer has their own terms and conditions, and these are given in the supply agreement. Always make sure you fully understand the terms and conditions of doing business with your clients before you commit yourself.

Q6: Can I request buyers pay me in cash rather than by cheque?

A6: Buyers have their preferred payment methods and you may have to accept the way they choose to do it.

Q7: If I have good plantlets but lack accompanying documentation (delivery notes, sales receipt, etc.), can I still sell my plantlets?

A7: This depends on the buyer's policy. Some companies are strict on business documents (for purposes of accountability) and will not do business with anyone who doesn't have the correct documents. All nursery operators should ensure they have the required business documents.

References (module 4)

Mayer DA. 2008. *The Everything Economics Book: from Theory to Practice, Your Complete Guide to Understanding Economics Today*. *Everything series*. Adams Media, Avon, USA.

Food and Agriculture Organization (FAO). 2004. *Helping Small Farmers Think About Better Growing and Marketing: A Reference Manual. Pacific Farm Management and Marketing Series No 3*. Food and Agriculture Organization (FAO), Apia, Samoa.

www.rtb.cgiar.org